Rizzetta & Company

Waters Edge
Community Development District

Board of Supervisor's Regular Meeting
July 23, 2026

District Office:
5844 Old Pasco Road, Suite 100
Wesley Chapel, Florida 33544
813.994.1001

www.watersedgecdd.org

WATERS EDGE
COMMUNITY DEVELOPMENT DISTRICT

The Waters Edge Clubhouse
9019 Creedmoor Lane, New Port Richey, FL 34654

www.watersedgecdd.org

Board of Supervisors	Ken Smith	Chairman
	George Anastasopoulos	Vice Chairman
	Gabriel Papadopoulos	Assistant Secretary
	Craig Pettitt	Assistant Secretary
	Danny Knoblock	Assistant Secretary
District Manager	Lisa Castoria	Rizzetta & Company, Inc.
District Counsel	Cari Webster	Straley Robin & Vericker
District Engineer	Frank Nolte	Stantec

All cellular phones must be placed on mute while in the meeting room.

The Audience Comment portion of the agenda is where individuals may make comments on matters that concern the District. Individuals are limited to a total of three (3) minutes to make comments during this time.

Pursuant to provisions of the Americans with Disabilities Act, any person requiring special accommodations to participate in this meeting / hearing / workshop is asked to advise the District Office at least forty-eight (48) hours before the meeting / hearing / workshop by contacting the District Manager at (813) 994-1001. If you are hearing or speech impaired, please contact the Florida Relay Service by dialing 7-1-1, or 1-800-955-8771 (TTY) 1-800-955-8770 (Voice), who can aid you in contacting the District Office.

A person who decides to appeal any decision made at the meeting/hearing/workshop with respect to any matter considered at the meeting/hearing/workshop is advised that person will need a record of the proceedings and that accordingly, the person may need to ensure that a verbatim record of the proceedings is made including the testimony and evidence upon which the appeal is to be based.

WATER'S EDGE COMMUNITY DEVELOPMENT DISTRICT

District Office · Wesley Chapel, Florida · (813) 994-1001
Mailing Address – 3434 Colwell Avenue, Suite 200, Tampa, Florida 33614
www.watersedgecdd.org

Board of Supervisors
Water's Edge Community
Development District

7/16/2026

FINAL AGENDA

Dear Board Members:

The regular meeting of the Board of Supervisors of the Water's Edge Community Development District will be held on **Thursday, July 23, 2026, at 5:00 p.m. at the Water's Edge Clubhouse, located at 9019 Creedmoor Lane, New Port Richey, FL 34654**. The following is the agenda for this meeting.

BOS MEETING

1. **CALL TO ORDER/ROLL CALL**
2. **AUDIENCE COMMENTS ON AGENDA ITEMS**
3. **STAFF REPORTS**
   - **A.** Aquatics Manager Monthly Report ....Tab 1
   - **B.** Irrigation Report
   - **C.** District Engineer Report .....Tab 2
     1. Update on Dumping at 10940 Oyster Bay Circle
   - **D.** PSA Landscape Inspection Reports.....Tab 3
   - **E.** District Counsel
   - **F.** District Manager Report .....Tab 4
     1. Review of 2nd Quarter Website Audit Report.....Tab 5
4. **BUSINESS ITEMS**
   - **A.** Discussion on Belle Haven Landscape Lighting
   - **B.** Discussion on Resident Irrigation Education Workshop Dates
   - **C.** Ratification of Leaking Backflow Device Proposal ....Tab 6
5. **BUSINESS ADMINISTRATION**
   - **A.** Consideration of Minutes of the Board of Supervisors' Regular Meeting held on June 25, 2026……Tab 7
   - **B.** Consideration of Operations and Maintenance Expenditures for June 2026……Tab 8
6. **AUDIENCE COMMENTS AND SUPERVISOR REQUESTS**
7. **ADJOURNMENT**

We look forward to seeing you at the meeting. In the meantime, if you have any questions, please do not hesitate to call us at (813) 994-1001.

Sincerely,

Lisa Castoria

District Manager

Tab 1

Sitex Aquatics
LAKE & FOUNTAIN SERVICES

MONTHLY REPORT

JULY, 2026



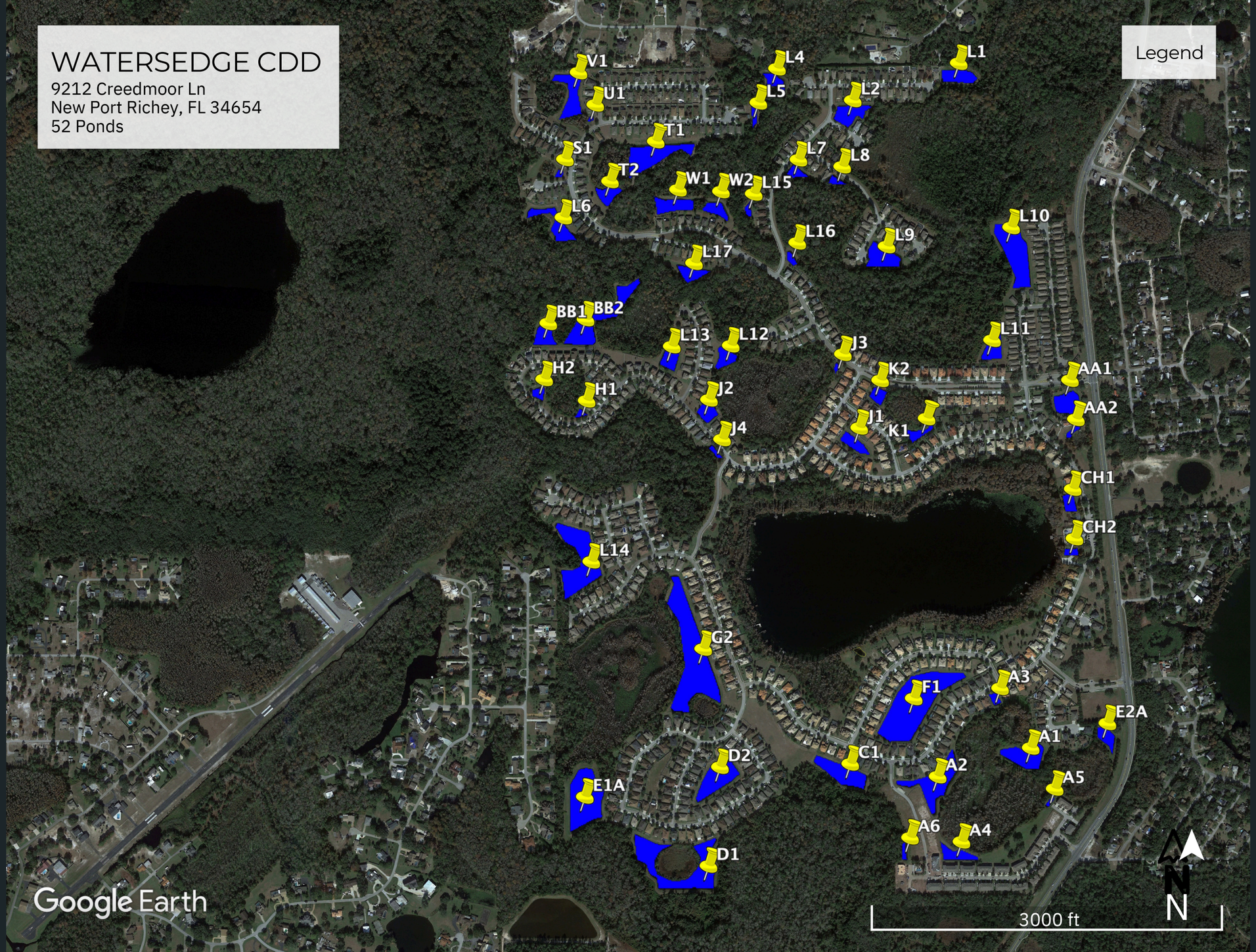
WATERSEDGE CDD
9212 Creedmoor Ln
New Port Richey, FL 34654
52 Ponds
Legend
V1
U1
L4
L5
L1
L2
T1
S1
T2
L7
L8
W1
W2
L15
L6
L16
L9
L10
L17
BB1
BB2
L13
L12
J3
L11
H2
H1
J2
K2
AA1
AA2
J1
K1
J4
CH1
CH2
L14
G2
F1
A3
E2A
A1
D2
C1
A2
A5
E1A
A6
A4
D1
Google Earth
3000 ft
N

SUMMARY:

The hardest days of summer are here. Water temperatures are extremely high through the next 3 months and Algae blooms will be treated and aggressively prevented. Dissolved oxygen levels are very low. Treatments will be done more strategically to prevent oxygen loss and inspections will be more frequent this time of year to help stay ahead of these blooms.



Pond #L13 Treated for Algae and Shoreline Vegetation.



Pond #BB2 Treated for Algae and Shoreline Vegetation.



Pond #J3 Treated for Shoreline Vegetation.



Pond #C1 Treated for Shoreline Vegetation.



Pond #D2 Treated for Shoreline Vegetation.



Pond #G2 Treated for Algae and Shoreline Vegetation.



Pond #A6 Treated for Shoreline Vegetation.



Pond #L6 Treated for Shoreline Vegetation.



Pond #A2 Treated for Shoreline Vegetation.



Pond #L15 Treated for algae and Shoreline Vegetation.



Pond #L1 Treated for Shoreline Vegetation.



Pond #L9 Treated for Shoreline Vegetation.



Pond #K2 Treated for Spike rush and Shoreline Vegetation.



Pond #AA1 Treated for Algae and Shoreline Vegetation.



Pond #K1 Treated for Algae and Shoreline Vegetation.

AA1: Was treated for Algae and shoreline vegetation.
AA2: Was treated for shoreline vegetation.
CH1: Was treated for Algae and shoreline vegetation.
CH2: Was treated for Algae and shoreline vegetation.
A1: Was treated for shoreline vegetation.
A2: Was treated for shoreline vegetation.
A3: Was treated for Algae and shoreline vegetation.
A4: Was treated for shoreline vegetation.
A5: Was treated for shoreline vegetation.
A6: Was treated for shoreline vegetation.
E1A: Was treated for shoreline vegetation.
F1: Was treated for Algae and shoreline vegetation.
C1: Was treated for and shoreline vegetation.

D1: Was treated for algae and shoreline vegetation.
D2: Was treated for shoreline vegetation.
E1A: Was treated for Algae and shoreline vegetation.
G2: Was treated for shoreline vegetation.
L1: Was treated for shoreline vegetation.
L2: Was treated for shoreline vegetation.
L4: Was treated for Algae and shoreline vegetation.
L5: Was treated for Algae and shoreline vegetation.
L6: Was treated for shoreline vegetation.
L7: Was treated for shoreline vegetation.
L8: Was treated for shoreline vegetation.
L9: Was treated for Algae and shoreline vegetation.
L10: Was treated for Algae and shoreline vegetation.

L11: Was treated for Algae and shoreline vegetation.
L12: Was treated for Algae and shoreline vegetation.
L13: Was treated for shoreline vegetation.
L14: Was treated for shoreline vegetation.
L16: Was treated for shoreline vegetation.
L17: Was treated for Algae and shoreline vegetation.
J1: Was treated for Algae and shoreline vegetation.
J2: Was treated for shoreline vegetation.
J3: Was treated for Algae and shoreline vegetation.
J4: Was treated for shoreline vegetation.
K1: Was treated for Algae and shoreline vegetation.
K2: Was treated for Algae and shoreline vegetation.
H1: Was treated for shoreline vegetation.

H2: Was treated for shoreline vegetation.
BB1: Was treated for Algae and shoreline vegetation.
BB2: Was treated for shoreline vegetation.
S1: Was treated for shoreline vegetation.
T1: Was treated for shoreline vegetation.
T2: Was treated for Algae and shoreline vegetation.
U1: Was treated for shoreline vegetation.
V1: Was treated for Algae and shoreline vegetation.
W1: Was treated for shoreline vegetation.
W2: Was treated for shoreline vegetation.

Tab 2

July 23, 2026

Waters Edge Community Development District Engineer's Report:

10940 Oyster Bay Circle – Unauthorized Dumping in Conservation area

- Staff reviewed cleanup efforts on 7/8/26 and found dumping to have been cleaned up, and conservation area to be in compliance. Photo attached.

Castine Street Stormwater Cleaning

- Jetting and Vac services completed on 7/13. Invoice and report of completed efforts attached.

Pond AA1 – Fencing Installation and Flume Repair

- Stantec staff reviewed broken reclaimed flume and services agreement with Pasco County. Services agreement lists the County as the maintenance entity for transmitting reclaimed water into the CDD owned reclaimed pond. We are awaiting status for repairs.
- Stantec staff recommends putting fence project on hold until flume is repaired and/or arrangements are made for access to the pond.





Invoice

Florida Jetclean - Jetclean America
1660 Sea Breeze Drive
Tarpon Springs, FL 34689
800-226-8013

Svc Date	Due Date	Invoice #
7/13/2026	8/12/2026	16522

Bill To	Ship To
Water's Edge CDD P.O. Box 32414 Charlotte, NC 28232	Existing Storm Piping

P.O. No.	Terms	Project Information
Frank Nolte	Net 30	Jet-Vac Service

Date(s)	Description	Amount
7/13/26	Combination jet-vac truck and crew for high-flow jetcleaning of storm piping and vacuum removal of debris/silt from inlet structures, as instructed, and per approved proposal.	2,800.00
	Total	**$2,800.00**

Thank you for your business.

- PLEASE NOTE OUR NEW ADDRESS!

- ALL MAJOR CREDIT CARDS ACDEPTED WITH 4.5% PROCESSING FEE.

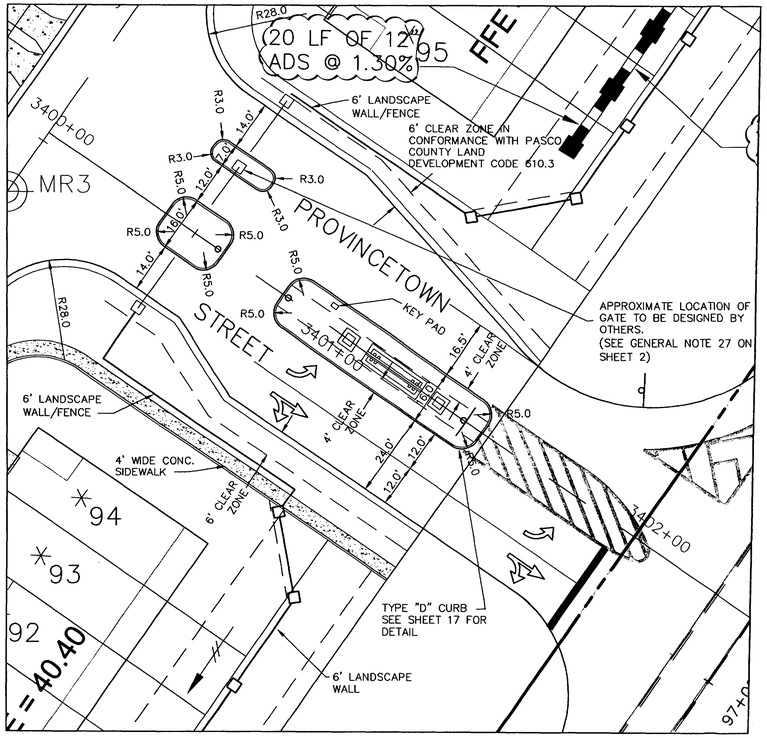

INSET A
1:20

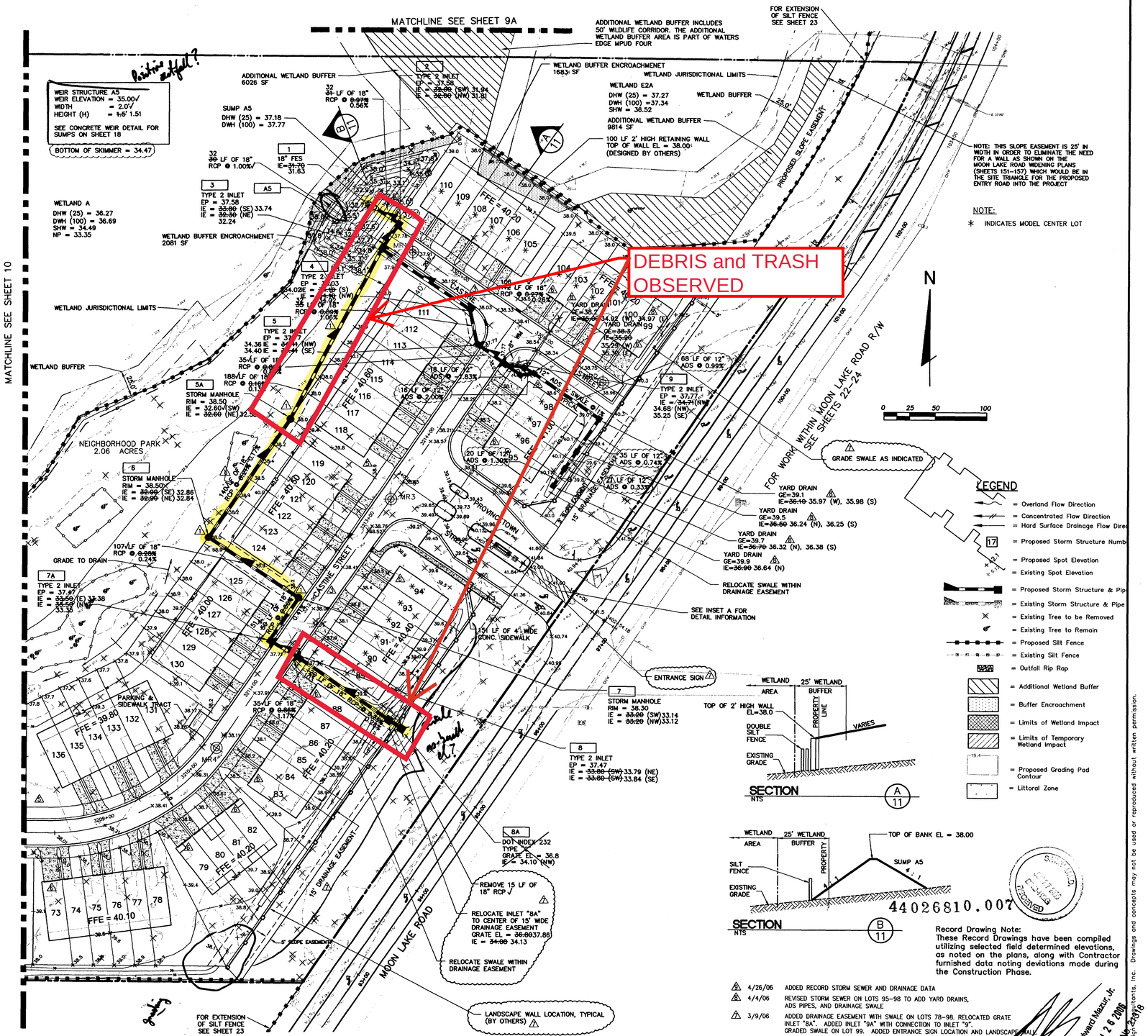

Record Drawing Note:
These Record Drawings have been compiled utilizing selected field determined elevations, as noted on the plans, along with Contractor furnished data noting deviations made during the Construction Phase.

44026810.007

NO.	DATE	REVISIONS	APP'D BY
6	4/26/06	ADDED RECORD STORM SEWER AND DRAINAGE DATA	
5	4/4/06	REVISED STORM SEWER ON LOTS 95-98 TO ADD YARD DRAINS, ADS PIPES, AND DRAINAGE SWALE	
4	3/9/06	ADDED DRAINAGE EASEMENT WITH SWALE ON LOTS 78-98. RELOCATED GRATE INLET "8A". ADDED INLET "9A" WITH CONNECTION TO INLET "9". GRADED SWALE ON LOT 99. ADDED ENTRANCE SIGN LOCATION AND LANDSCAPE WALL	
3	2/15/06	ADDED DOUBLE DRIVEWAYS ON SELECTED LOTS	
2	1/21/06	REMOVED ADDITIONAL PARKING SPACES WITHIN LOTS 98, 118, 119, & 139	
1	1/19/06	ADDED SUPPLEMENTARY REAR AND FRONT LOT SPOT ELEVATIONS	
	1/05/06	REVISED STREET NAMES	
	11/04/05	ADDED ADDITIONAL PARKING	
	4/4/05	STORMWATER MODIFIED TO REMOVE SECTION ON CASTINE	EM
		DRIVE & PER SWFWMD COMMENTS	

DESIGNED JC
DRAWN JC
CHECKED EM
Q.C.

THE SIGNATURE OF THE QUALITY CONTROL OFFICER IN THIS SPACE INDICATES THAT ALL REQUIRED PERMITS HAVE BEEN OBTAINED AND THAT CONSTRUCTION IS AUTHORIZED TO COMMENCE.

FLORIDA DESIGN CONSULTANTS, INC.
ENGINEERS, ENVIRONMENTALISTS, SURVEYORS & PLANNERS
3030 Starkey Blvd, New Port Richey FL 34655
Tel. (727) 849-7588 - Fax. (727) 846-3648
E.B. No. 7421

PREPARED FOR:
THE RYLAND GROUP, INC.
255 PINE AVENUE NORTH
OLDSMAR, FLORIDA 34667
PHONE (813) 329-7600 FAX (813) 329-7688

SHEET DESCRIPTION:
WATERS EDGE TOWNHOMES
(WATERS EDGE MPUD PARCEL 15)
CONSTRUCTION PLANS
PAVING, GRADING, AND DRAINAGE PLAN

Edward Mazur, Jr. P.E. No. 29818 JUN 26 2006

JOB NO. 506-67
EPN 84
F.B. & PG. F.B.8PG.
SHT 11
DATE: 11/31/05
OF 24

© Copyright 2006 Florida Design Consultants, Inc. Drawings and concepts may not be used or reproduced without written permission.

K:\Eft\Proj\Ext\Multifamily\Eft_PC2-MF.dwg - Jun 26, 2006 @ 8:32pm - wall


S-1






SUMP A5


SUMP A5


S-2


S-3


S-8


S-8
VACALL
DOT# 1623902


S-8A







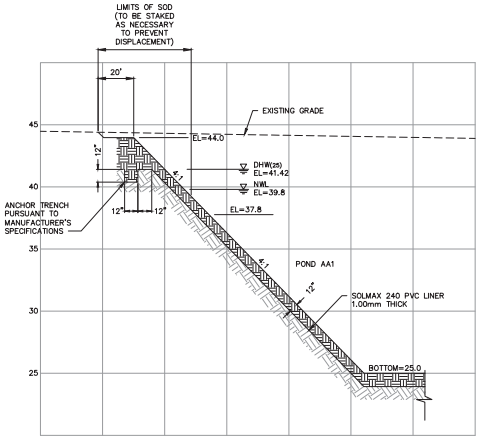

EXISTING POND LINER SECTION

N.T.S.

NOTE:

IRRIGATION POND CONTAINS PVC LINER TO APPROXIMATE ELEVATION 44. THE LINER SHALL BE REPAIRED FOLLOWING CONSTRUCTION OF THE STILLING WELL AND CONCRETE FLUME OR ANY OTHER CONSTRUCTION THAT CAUSES DAMAGE TO THE LINER.

MOON LAKE ROAD

JAMES P. VAIL CHONCIOLA LICENSE NO. 45175 STATE OF FLORIDA PROFESSIONAL ENGINEER

DESIGNED AVS
DRAWN AVS
CHECKED JPC
D.C. EM

THE SIGNATURE OF THE QUALITY CONTROL OFFICER IN THIS SPACE INDICATES THAT ALL REQUIRED PERMITS HAVE BEEN OBTAINED AND THAT CONSTRUCTION IS AUTHORIZED TO COMMENCE.

FLORIDA DESIGN CONSULTANTS, INC.
THINK IT. ACHIEVE IT.
3030 STARKEY BOULEVARD, NEW PORT RICHEY, FLORIDA 34655
PHONE: (800) 532-1047 WWW.FLDESIGN.COM C.A. NO. 7421

PREPARED FOR:

PASCO COUNTY FLORIDA
UTILITIES DEPARTMENT
19420 CENTRAL BLVD.
LAND O' LAKES, FL 34637
PHONE: (813) 235-6199 FAX: (727) 847-8083

SHEET DESCRIPTION:

WATERS EDGE RESIDENTIAL AND RIVER RIDGE GOLF COURSE RECLAIMED WATER TRANSMISSION MAIN POND SITE PLAN

NO.	DATE	REVISIONS	APP'D BY

JOB NO. 0241-0108
EPR 417
F.B. & PG. N/A
DATE: 05/2017
SHT. 53 OF 66

©Copyright, 2017 Florida Design Consultants, Inc. Drawings and concepts may not be used or reproduced without written permission.

K:\FI\Projects\Corridors\Old Pond\FI_JOB-PSTE.dwg - Aug 25, 2017 @ 11:11am - jdavis

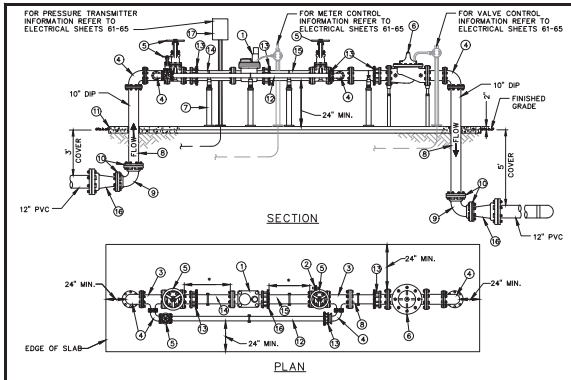

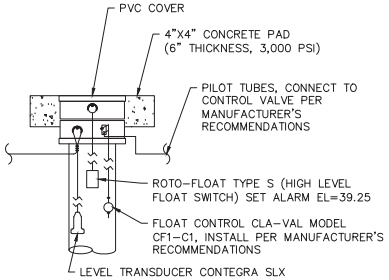

DETAIL "A"
N.T.S.

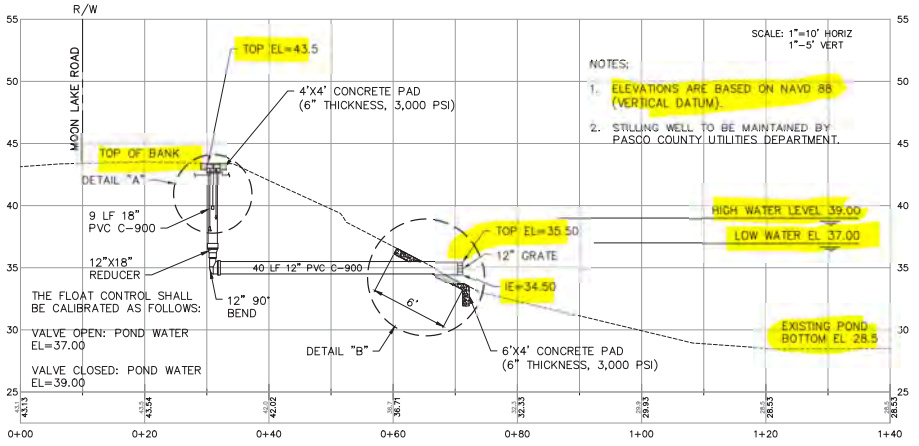

STILLING WELL PROFILE-DETAIL

* AS RECOMMENDED BY METER MANUFACTURER

ITEM	QUANT.	MATERIALS DESCRIPTION
1	1	WATER METER w/AMR (BADGER) ORION READING SYSTEM (SEE NOTES BELOW)
2	1	TEE FLG X FLG X FLG W/ BLIND PLATE TAPPED FOR 2" BALL VALVE MIP X FIP
3	2	10"X6" TEE, FLG x FLG x FLG (STD)
4	4	6" BEND 90° FLG x FLG (STD)
5	3	10" VALVE, GATE FLG x FLG RESILIENT SEAT NRS
6	1	10" 124-18KO BACK PRESSURE SUSTAINING VALVE
7	3	ADJ. PIPE SUPPORTS - ANVIL FIG. 265 W/ 63T STANCHION & BASE PLATE
8	2	10" SPOOL PIECE FLG x PE D.I.P.
9	2	10" BEND 90° MJ x MJ
10	4	RESTRAINED JOINT MJ (MEGALUG OR EQUAL)
11	1	CONCRETE SLAB 6" THICK W/ 6"x6" 10/10 W.W.F. OR FIBERMESH REINFORCING
⇔12	1	6" BY-PASS PIPE D.I.P. FLG x PE
13	4	FLANGE ADAPTER (EBAA SERIES 2100 MEGAFLANGE, DRESSER 128, O/E)
14	1	10" SPOOL PIECE FLG x FLG - LENGTH TO BE 5 PIPE DIAMETERS W/ STRAINER
15	1	10" SPOOL PIECE FLG x PE - LENGTH TO BE 3 PIPE DIAMETERS
16	2	12"X10" MJ REDUCER
17	1	ROSEMOUNT 3051T W/ 306 BLOCK-AND-BLEED VALVE

* FOR RE-USE ONLY*

NOTES:
- WATER METER - 10" RECORD ALL TURBO 5500 W/ HR-LCD 4-20 mA DC OUTPUT REGISTER.
- METER & BFP ASSEMBLY TO BE INSTALLED LEVEL & PLUMB.
- METER BY-PASS TO BE SIZED NO LESS THAN 1/2 METER SIZE, 3" MIN.
- ENTIRE ASSEMBLY TO BE PAINTED PANTONE 522.
- BFP TO BE SIZED EQUAL TO OR GREATER THAN METER SIZE.
- MECHANICAL JOINTS SHALL BE RESTRAINED AS SPECIFIED BY COUNTY/ENGINEER.
- BELL JOINT RESTRAINERS SHALL BE PROVIDED ON ALL UNDERGROUND PIPING.
- ALL ABOVE GROUND PIPING SHALL BE FLANGED DUCTILE IRON PIPE CEMENT LINED (NO GALVANIZED OR PVC).
- PASCO COUNTY SHALL HAVE THE OPTION OF REQUIRING THE ENTIRE ASSEMBLY TO BE ENCLOSED IN 6' CHAIN LINK FENCE.
- BFP MUST BE LISTED WITH THE UNIVERSITY OF SOUTHERN CALIFORNIA FOUNDATION FOR CROSS CONNECTION CONTROL AND HYDRAULIC RESEARCH (USC APPROVED).
- ABOVE GROUND INLET AND DISCHARGE PIPING SHALL BE SIZED IDENTICAL TO METER INLET SIZE.
- ALL METERING EQUIPMENT SHALL BE FULLY COMPATIBLE WITH THE CURRENT PCU AUTOMATIC METER READING (AMR) SYSTEM.

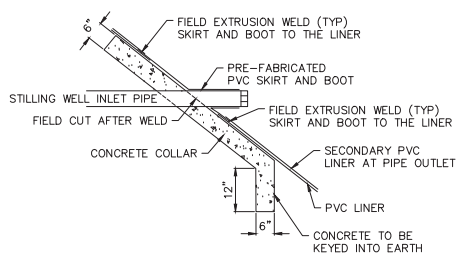

PVC LINER REPAIR FOR PIPE PENETRATION

DETAIL "B"
N.T.S.

10" BULK RECLAIMED WATER METER ASSEMBLY

SECTION 2
N.T.S.

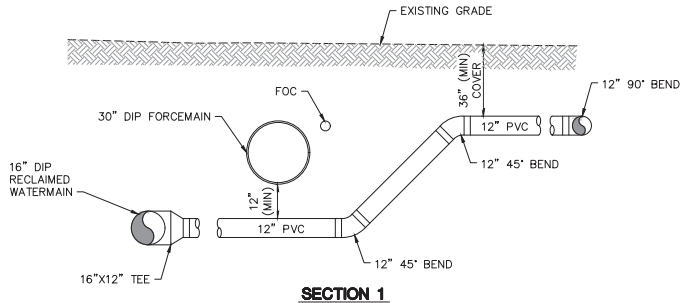

SECTION 1
N.T.S.

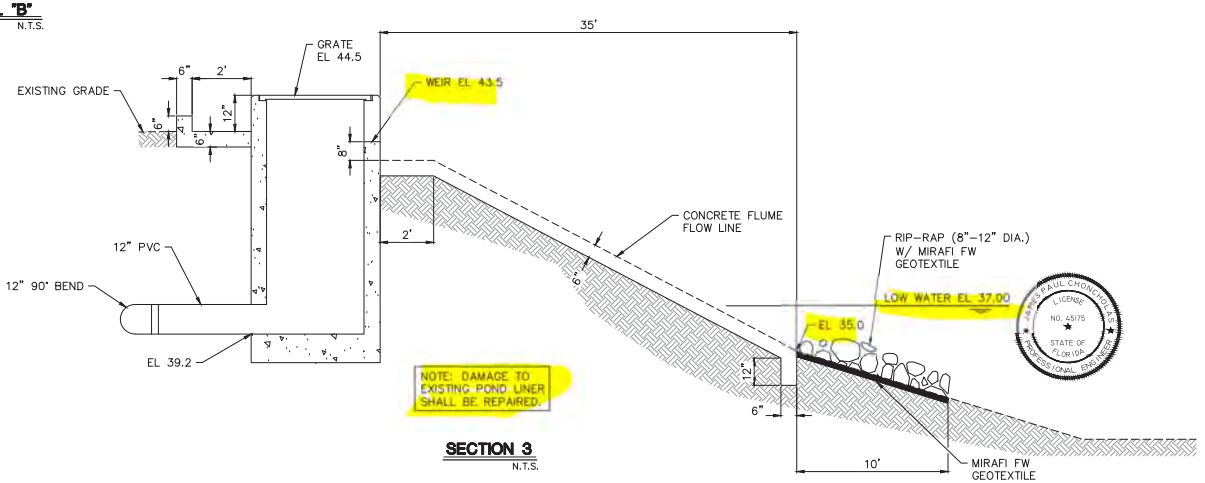

SECTION 3
N.T.S.

DANIEL CHONTOS LICENSE NO. 45175 STATE OF FLORIDA PROFESSIONAL ENGINEER

DESIGNED AVS
DRAWN AVS
CHECKED JPC
D.C. EM

THE SIGNATURE OF THE QUALITY CONTROL OFFICER IN THIS SPACE INDICATES THAT ALL REQUIRED PERMITS HAVE BEEN OBTAINED AND THAT CONSTRUCTION IS AUTHORIZED TO COMMENCE.

FLORIDA DESIGN CONSULTANTS, INC.
THINK IT. ACHIEVE IT.
3030 STARKEY BOULEVARD, NEW PORT RICHEY, FLORIDA 34655
PHONE: (800) 532-1047 WWW.FLDESIGN.COM C.A. NO.7421

PREPARED FOR:
PASCO County Florida

PASCO COUNTY FLORIDA UTILITY DEPARTMENT
UTILITIES DEPARTMENT
19420 CENTRAL BLVD.
LAND O' LAKES, FL 34637
PHONE: (813) 235-6199 FAX: (727) 847-8083

SHEET DESCRIPTION:
WATERS EDGE RESIDENTIAL AND RIVER RIDGE GOLF COURSE RECLAIMED WATER TRANSMISSION MAIN DETAILS (1)

NO.	DATE	REVISIONS	APP'D BY

JOB NO. 0241-0108
EPR 417
F.B. & PG. N/A
DATE: 05/2017
SHT. 54 OF 66

©Copyright, 2017 Florida Design Consultants, Inc. Drawings and concepts may not be used or reproduced without written permission.

K:\AT\Projects\Corrections\WCM Plans\AT_JPDR-PDET.dwg - Aug 28, 2017 @ 11:12am - jbarta

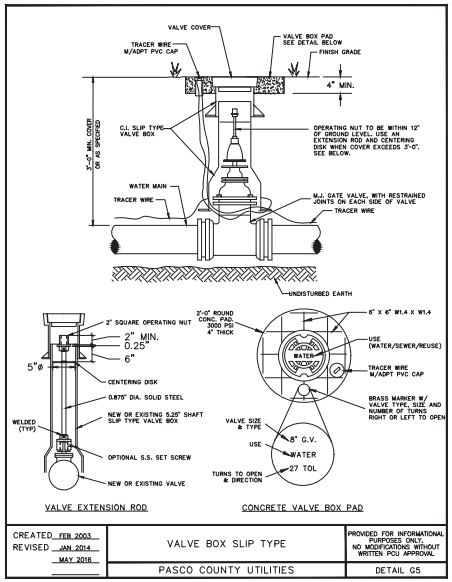

CREATED FEB 2003	VALVE BOX SLIP TYPE	PROVIDED FOR INFORMATIONAL PURPOSES ONLY. NO MODIFICATIONS WITHOUT WRITTEN PCU APPROVAL
REVISED JAN 2014 MAY 2016	PASCO COUNTY UTILITIES	DETAIL G5

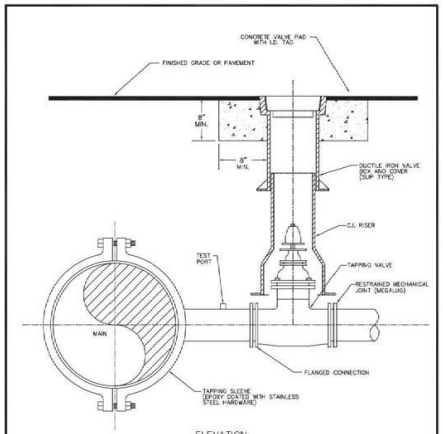

NOTES:
- SADDLE CONNECTION WILL BE TESTED TO 150 PSI PRIOR TO TAPPING MAIN.
- MECHANICAL JOINTS/UNDERGROUND PIPING SHALL BE RESTRAINED AS SPECIFIED BY COUNTY/ENGINEER.
- VALVE EXTENSION ROD SHALL BE UTILIZED, AS NECESSARY, SO THAT VALVE OPERATING NUT IS A MAXIMUM OF 3' BELOW GRADE.

CREATED 02/24/03	WATER, REUSE, AND FORCE MAIN TAPPING DETAIL W/ VALVE LOCATION	PROVIDED FOR INFORMATIONAL PURPOSES ONLY. NO MODIFICATIONS WITHOUT WRITTEN PCU APPROVAL
REVISED	PASCO COUNTY UTILITIES	DETAIL 37

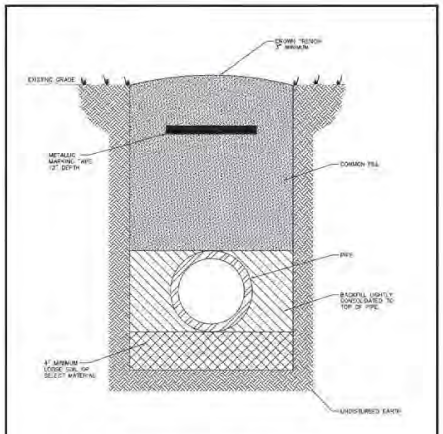

NOTES: LOOSE SOIL OR SELECT MATERIAL IS NATIVE SOIL EXCAVATED FROM THE TRENCH FREE OF ROCKS AND FOREIGN MATERIAL. COMMON FILL TO BE PLACED AND COMPACTED IN 12" LAYERS. ROLLER EQUIPMENT SHALL NOT BE USED TOO COMPACTION LEVEL A MINIMUM OF 12" OF COMMON FILL HAS BEEN PLACED AND COMPACTED OVER THE PIPE. THREE FEET OF FILL SHALL BE PLACED BEFORE A VIBRORAMMER MAY BE USED FOR COMPACTION.

CREATED 02/24/03	PIPE LAYING CONDITIONS STANDARD UNPAVED AREAS	PROVIDED FOR INFORMATIONAL PURPOSES ONLY. NO MODIFICATIONS WITHOUT WRITTEN PCU APPROVAL
REVISED	PASCO COUNTY UTILITIES	DETAIL 39

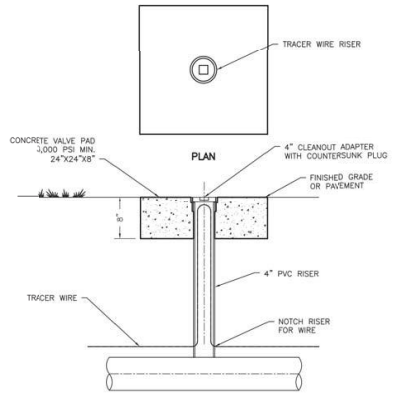

NOTES:
1. TRACER WIRE RISERS TO BE INSTALLED EVERY 500' ALONG THE PIPE CENTERLINE AND AT ALL SPLICES
2. WIRE SHALL BE COLOR CODED TO MATCH PIPE
3. THERE SHALL BE TWO (2) WIRES #10 AWG SOLID COPPER.
4. FOR OFFSET TEST STATIONS, SPLICE TRACER WIRE USING #10 SPLICE KIT MANUFACTURED BY TUHORSE (OR APPROVED EQUAL).

TEST STATION
TRACER WIRE RISER DETAIL
N.T.S.

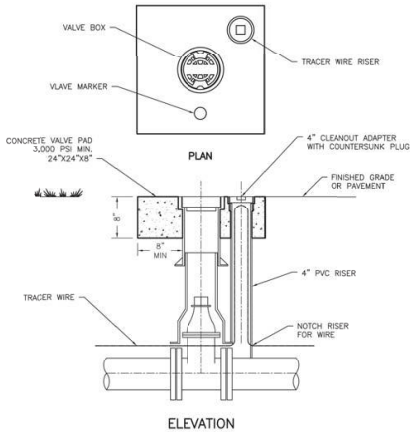

NOTES:
1. TRACER WIRE RISERS TO BE INSTALLED EVERY 500' ALONG THE PIPE CENTERLINE AND AT ALL SPLICES
2. WIRE SHALL BE COLOR CODED TO MATCH PIPE
3. FOR OFFSET TEST STATIONS, SPLICE TRACER WIRE USING #10 SPLICE KIT MANUFACTURED BY TUHORSE (OR APPROVED EQUAL).

TEST STATION
TRACER WIRE AT VALVE RISER DETAIL
N.T.S.

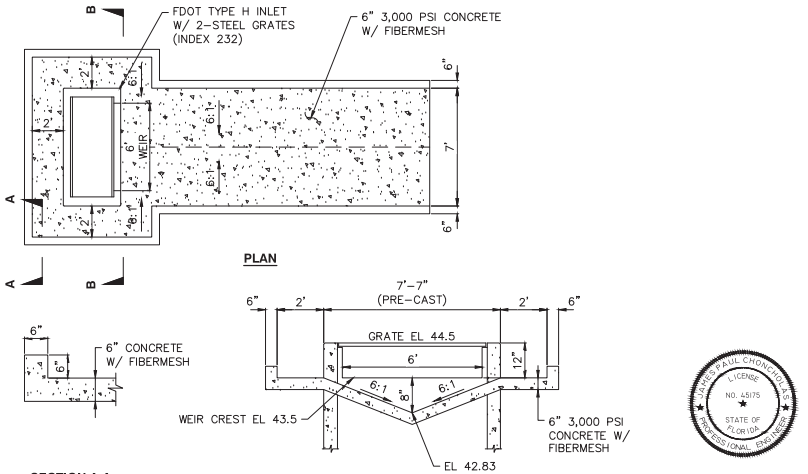

FDOT TYPE H AND CONCRETE FLUME DETAIL
N.T.S.

JAMES P. NEIL CHONIS, LICENSE NO. 45175, STATE OF FLORIDA, PROFESSIONAL ENGINEER

DESIGNED AVS
DRAWN AVS
CHECKED JPC
Q.C. EM

THE SIGNATURE OF THE QUALITY CONTROL OFFICER IN THIS SPACE INDICATES THAT ALL REQUIRED PERMITS HAVE BEEN OBTAINED AND THAT CONSTRUCTION IS AUTHORIZED TO COMMENCE.

FLORIDA DESIGN CONSULTANTS, INC.
THINK IT. ACHIEVE IT.
3030 STARKEY BOULEVARD, NEW PORT RICHEY, FLORIDA 34655
PHONE: (800) 532-1047 WWW.FLDESIGN.COM C.A. NO. 7421

PREPARED FOR:
PASCO County Florida
PASCO COUNTY FLORIDA UTILITY DEPARTMENT
UTILITIES DEPARTMENT
19420 CENTRAL BLVD.
LAND O' LAKES, FL 34637
PHONE: (813) 235-6199 FAX: (727) 847-8083

SHEET DESCRIPTION:
WATERS EDGE RESIDENTIAL AND RIVER RIDGE GOLF COURSE RECLAIMED WATER TRANSMISSION MAIN DETAILS (2)

NO.	DATE	REVISIONS	APP'D BY

JOB NO. 0241-0108
EPR 417
F.B. & PG. N/A
DATE: 05/2017
SHT. 55 OF 66

©Copyright, 2017 Florida Design Consultants, Inc. Drawings and concepts may not be used or reproduced without written permission.

K:\FT\Projects\Corrections\PCW Permit\FT_PCW-PERT.dwg - Aug 28, 2017 @ 11:12am - jblake

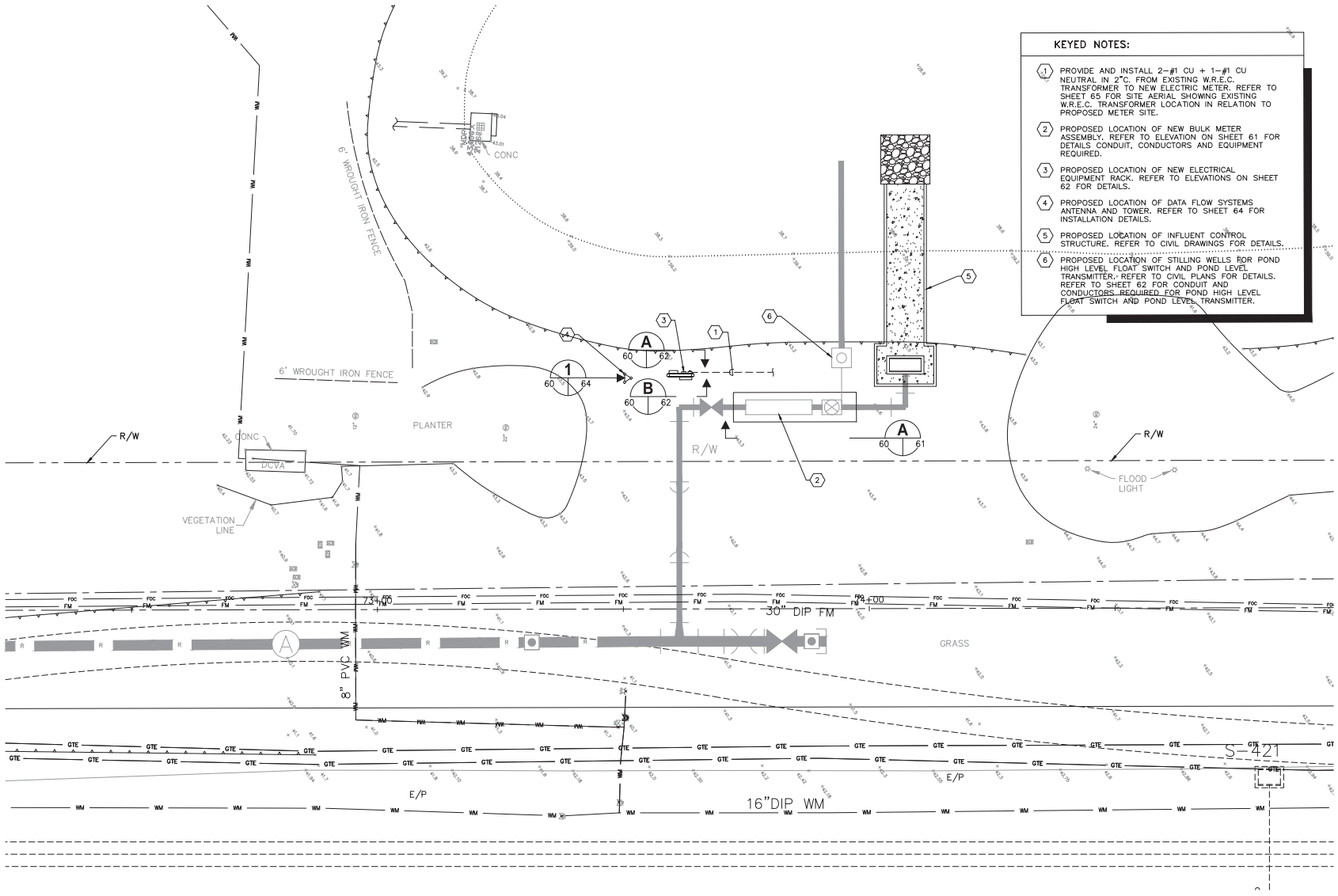

TRICON ENGINEERING
777 S. Harbor Island Blvd, STE 33, TAMPA, FL 33602
813_227_8199 FAX 813_227_8195
Certificate of Authorization No. 0003102

DESIGNED TT
DRAWN JLH
CHECKED TT
D.C. GLW

THE SIGNATURE OF THE QUALITY CONTROL OFFICER IN THIS SPACE INDICATES THAT ALL REQUIRED PERMITS HAVE BEEN OBTAINED AND THAT CONSTRUCTION IS AUTHORIZED TO COMMENCE.

FLORIDA DESIGN CONSULTANTS, INC.
THINK IT. ACHIEVE IT.
3030 STARKEY BOULEVARD, NEW PORT RICHEY, FLORIDA 34655
PHONE: (800) 532-1047 WWW.FLDESIGN.COM C.A. NO. 7421

PREPARED FOR:
PASCO COUNTY FLORIDA
UTILITY DEPARTMENT
UTILITIES DEPARTMENT
19420 CENTRAL BLVD.
LAND O' LAKES, FL 34637
PHONE: (813) 235-6199 FAX: (727) 847-8083

SHEET DESCRIPTION:
WATERS EDGE RESIDENTIAL AND
RIVER RIDGE GOLF COURSE
RECLAIMED WATER TRANSMISSION MAIN
ELECTRICAL SITE PLAN

NO.	DATE	REVISIONS	APP'D BY

JOB NO. 0241-0108
EPR 417
F.B. & PG. N/A
DATE 05/2017
SHT. 60
OF 66

©Copyright, 2017 Florida Design Consultants, Inc. Drawings and concepts may not be used or reproduced without written permission.

K:\47\Projects\Construction\PDP Plans\Victon\47_PDP-Dec Site.dwg - Aug 28, 2017 @ 11:13am - jlaska

shown on the attached Exhibit A. The COUNTY will be responsible for the design, permitting, and construction of the reclaimed water mains to the storage pond/irrigation system(s). The OWNERS agree that the COUNTY shall have reasonable access to the Property for necessary construction, maintenance, modification, and repairs of the reclaimed water mains. Upon completion of the PROJECT, maintenance and operation of onsite pump stations, including electric power cost, fuel cost, pump repairs, or supply well repairs shall be the sole responsibility of the OWNERS. The OWNERS shall also be responsible for the operation and maintenance of the distribution piping and irrigation system(s) on the property, including the OWNERS' pumping facilities.

8. The COUNTY, at its cost, shall provide, operate, and maintain the necessary treatment and reclaimed water transmission facilities to provide reclaimed water to the OWNERS' pond.

9. The OWNERS further agree to pay the COUNTY for reclaimed water service at the then existing reclaimed water rates as established from time to time by the Board of County Commissioners. The OWNERS understand this is a variable rate and it is subject to change based on a range of hydrologic conditions and the supply and demand of reclaimed water across the System as set and determined by the COUNTY.

10. The issuance of any permit or permits by the FDEP and the COUNTY'S construction of its transmission and pumping facilities necessary to effectuate the purpose of this agreement shall be an express condition precedent to the effectiveness of this agreement.

11. Subject to available quantities of reclaimed water and Permit conditions, the COUNTY agrees to provide, and the OWNERS agree to accept, the maximum amount of reclaimed water the Property is capable of adequately handling, so long as the application of the reclaimed water does not cause damage to the Property which would adversely affect the use thereof, in the opinion of the OWNERS. As long as this agreement shall remain in effect, the OWNERS shall have the use of the reclaimed water from the System at an equal priority as all other customers of the System. The OWNERS acknowledge that the COUNTY cannot guarantee reclaimed water will be available at all times.

12. If available reclaimed water is insufficient to satisfy the OWNERS' requirements for the Property, the OWNERS shall use its onsite wells or other permitted water sources for normal watering. The

Tab 3

PSA
HORTICULTURAL

Landscape Consulting & Contract Management
"Protecting Your Landscape Investment"

8431 Prestwick Place
Trinity, FL 34655

LANDSCAPE INSPECTION RESULTS

Date:	July 2, 2026
Client:	Water's Edge HOA/CDD
HOA/CDD:	Mickey McCarthy
Manager:	Rocco Iervasi
Ameriscape:	Al Suarez, Bill Milligan
PSA:	Tom Picciano

This landscape inspection report and subsequent ones will serve as both a benchmark of current landscape maintenance concerns and the progress toward corrective actions. It will also serve as a deficiency list of items that should be addressed under the current landscape maintenance agreement.

These items must be completed by July 20, 2026. Notify PSA in writing upon their completion, via fax or email, on or before 9:00 am on July 21, 2026. The contractor must initial the bottom of each page and sign at the bottom of the last page. The reason for any uncompleted deficiency must be listed.

SCORE 1=POOR 2= FAIR 3=GOOD

3 MOWING/EDGING/TRIMMING

The turf was neatly mowed at the correct height. The blades were sharp leaving a clean crisp cut. The beds were neatly defined. The hard edging was vertical, and all the edged material was cleaned out. The concrete surfaces were blown clean. There were no issues related to the mowing operation.

Moon Lake-keep bike path edged.

2 TURF COLOR

The color of the St. Augustine has diminished due to the disease activity in much of the high visibility turf panels.

Belle Haven entry and exit drive-the St. Augustine turf color ranged from a mottled medium green to a consistent medium green.

Slidell entry side- the St. Augustine turf color remained a mottled medium green with some heavy lime green discoloration.

Veteran's Park-the Bahiagrass turf color was mottled medium green.

Clubhouse parking lot fence line- the St. Augustine turf color ranged from a lightly mottled medium green to a consistent medium green.

Clubhouse front left side and berm area- the St. Augustine turf color of the berm ranged from a mottled medium green to a consistent medium green. The St. Augustine turf color at the large oak ranged from a mottled medium green to a consistent medium green.

Basketball court-the St. Augustine turf color ranged from a mottled medium green to a consistent medium green.

Clubhouse along the northern section of Moon Lake Road fence-the Bahiagrass turf color was a mottled medium green.

Bahiagrass throughout the community-the Bahiagrass turf color was a mottled medium green.

July *July*





June *June* *June*







June



May *May*





April *April*





2 TURF DENSITY

The regular rainfall has improved the density of the Bahiagrass. The St. Augustine turf density is being adversely affected by disease activity. .

Clubhouse front left side and berm area- the St. Augustine turf density of the berm ranged from fair to good. The St. Augustine turf density at the front left corner by large oak ranged from poor to fair. Disease activity affected the area.

Clubhouse along the northern section of Moon Lake Road fence line- the Bahiagrass turf density was good.

Clubhouse parking lot fence line-the St. Augustine turf density remained strong.

Other common areas–the Bahiagrass turf density was good.

Veteran's Park- the Bahiagrass turf density ranged from fair to good.

Slidell- the St. Augustine turf density ranged from poor to good. Disease activity affected the area.

Belle Haven entry and exit drive from Moon Lake to Creedmoor-the St. Augustine density ranged from poor to good. Disease activity affected the area.

Clubhouse basketball court sidewalk area-the St. Augustine density ranged from poor to good. Disease activity affected the area.

3 TURF WEED CONTROL

General workorder-broadleaf weeds were present in all viable St. Augustine turf panels. Their volume was low.

The turf has a relatively low volume of broadleaf weeds. It is recommended that treatments occur in the cooler early morning temperatures or postpone them until the overall cooler weather of fall to kill off the weeds.

2 TURF INSECT/DISEASE CONTROL/OVERALL HEALTH

Basketball court- replace new sod that has died and install new sod in other areas that have died. Treat disease activity. WARRANTY WORK. *Photo below.*





Clubhouse boat ramp area- replace dead sod. WARRANTY WORK. *Photo below.*



Slidell entry Drive- treat disease activity close to Moon Lake Road. *Photo below.*




Clubhouse front left corner- treat disease activity. *Photo below*.



Clubhouse left side berm- treat disease activity.

Belle Haven entry and exit drive from Moon Lake Road to Creedmoor-treat disease activity.

All turf that has died from disease activity needs to be replaced under warranty.

The turf was cut at the correct height with sharp blades. The higher mowing height allows for increased food production through photosynthesis. St. Augustine turf color, density and overall health have diminished over the past month due to prevalent disease activity. Broadleaf weed volume was low. There were no indications of insect activity but disease activity has affected the high visibility St. Augustine turf. Treatment for disease control must be started immediately. Reduce irrigation to turf to lessen chance of further disease outbreak. Dead turf needs to be replaced under warranty. Turf replacement should be done in conjunction with fungicide applications.

3 SHRUB/TREE INSECT/DISEASE CONTROL/OVERALL HEALTH

Most shrubs that are in decline have suffered from winter damage, early season drought or have “aged out”

Belle Haven entry drive at Moon Lake Road - remove dead azaleas.

Veterans Park - roebellini palm has frizzletop. Fertilize with palm specific fertilizer. Its condition has improved. It may be beneficial to insert fertilizer directly into the soil.

Creedmoor at boat ramp driveway- remove dead hollies.

11727 Belle Haven- treat fakahatchee grass for spider mites.

Basketball court pond- remove dead hollies along sidewalk. *Photo below.*



11601 Belle Haven- remove all dead lorapetalum.

11718 Belle Haven- remove dead azaleas.

11726 Belle Haven- treat fakahatchee grass for spider mites.

11715 Belle Haven -remove dead azaleas.

Outer Moon Lake Road wall- treat fakahatchee grass for spider mites.

3 BED WEED CONTROL

Bed weed control was strong.

2 IRRIGATION MANAGEMENT

Clubhouse front left corner - dripline is kinked over magnolia root. It needs to be cut, loosened and reconnected. *Photo below.*



It appears that the turf is receiving excessive irrigation which is worsening disease activity. The seasonal adjustment should be reduced and watering days if necessary.

3 SHRUB PRUNING

*It should be noted that the shrubs, including but not limited to, the hawthorns and schilling hollies, should not be pruned too tightly. This means that too much vegetative growth is being removed, limiting the plants availability to make food for itself. In addition, the plant will look more attractive by not having "holes" in it and allowing it to develop its more natural shape. (i.e. Indian Hawthorn has a natural mounded habit) Belle Haven entry drive inside of gate-prune dead sections out of juniper. *Photo below.*

Outer Moon Lake Road wall- remove scorched leaves from shell ginger and dead leaves from philodendron.

Belle Haven entry drive inside of gate-remove dead sections from juniper. *Photo below.*



Shrubs were pruned in accordance with their rotational schedule, and no immediate attention was needed.

3 TREE PRUNING

Clubhouse parking lot- remove dead palm fronds from palms at north end of lot.

Fairhope- prune oak tree away from streetlight.

Oyster Bay common area-prune away any low hanging branches over street.

Creedmoor common area- prune away any low hanging branches over street.

3 CLEANUP/RUBBISH REMOVAL

There was not a significant amount of litter or vegetative debris that needed to be removed.

N/A APPEARANCE OF SEASONAL COLOR

(0) CARRIED FORWARD FROM PRIOR MONTH

INSPECTION SCORE 29 of 33 –Passing score is 30 of 36 or 28 of 33 (with no seasonal color.)**PASSED INSPECTION Payment for July services should be released after the receipt of the DONE REPORT.**

SUMMARY

ASI performed to contractual standards for this inspection. The main issue associated with this inspection was the prevalence of disease activity in all high visibility St. Augustine turf. Fungicide applications in conjunction with proper irrigation management will help to reduce disease presence. Warranty installation of sod is necessary. There were no major deficiencies regarding the other components that make up the landscape maintenance program.
ASI certifies that all work on this list has been completed in the 14-day timeframe specified in the contractual agreement and provided to PSA within the same period.

Signature_____

Print Name _____

Company_____ **Date**_____

Tab 4

Rizzetta & Company

UPCOMING DATES TO REMEMBER

- **Next Regular Meeting & Public Hearing:** August 27, 2026, at 3:30 p.m.

District Manager's Report

July 23, 2026

WATERS EDGE CDD

FINANCIAL SUMMARY		5/31/2026
General Fund Cash & Investment Balance:		$349,847
Reclaimed Water Fund Balance:		$71,737
Reserve Fund Cash & Investment Balance:		$358,434
Debt Service Fund Investment Balance:		$575,483
Total Cash and Investment Balances:		**$1,355,501**
General Fund Expense Variance:	**$4,239**	**Over Budget**

Tab 5



Quarterly Compliance Audit Report

Waters Edge (Pasco)

Date: June 2026 - 2nd Quarter
Prepared for: Matthew Huber
Developer: Rizzetta
Insurance agency:

Preparer:
Jason Morgan - *Campus Suite Compliance*
ADA Website Accessibility and Florida F.S. 189.069 Requirements

Table of Contents

Compliance Audit

Overview 2
Compliance Criteria 2
ADA Accessibility 2
Florida Statute Compliance 3
Audit Process 3

Audit results

ADA Website Accessibility Requirements 4
Florida F.S. 189.069 Requirements 5

Helpful information:

Accessibility overview 6
ADA Compliance Categories 7
Web Accessibility Glossary 11

Compliance Audit Overview

The Community Website Compliance Audit (CWCA) consists of a thorough assessment of Florida Community Development District (CDD) websites to assure that specified district information is available and fully accessible. Florida Statute Chapter 189.069 states that effective October, 2015, every CDD in the state is required to maintain a fully compliant website for reporting certain information and documents for public access.

The CWCA is a reporting system comprised of quarterly audits and an annual summary audit to meet full disclosure as required by Florida law. These audits are designed to assure that CDDs satisfy all compliance requirements stipulated in Chapter 189.069.

Compliance Criteria

The CWCA focuses on the two primary areas – website accessibility as defined by U.S. federal laws, and the 16-point criteria enumerated in Florida Statute Chapter 189.069.



ADA Website Accessibility

Several federal statutes (American Disabilities Act, Sec. 504 and 508 of the Rehabilitation Act of 1973) require public institutions to ensure they are not discriminating against individuals on the basis of a person's disability. Community websites are required to conform to web content accessibility guidelines – WCAG 2.1, which is the international standard established to keep websites barrier-free and the recognized standard for ADA-compliance.



Florida Statute Compliance

Pursuant to F.S. 189.069, every CDD is required to maintain a dedicated website to serve as an official reporting mechanism covering, at minimum, 16 criteria. The information required to report and have fully accessible spans: establishment charter or ordinance, fiscal year audit, budget, meeting agendas and minutes and more. For a complete list of statute requirements, see page 3.

Audit Process

The Community Website Compliance Audit covers all CDD web pages and linked PDFs.* Following the WCAG 2.1 levels A, AA, and AAA for web content accessibility, a comprehensive scan encompassing 312 tests is conducted for every page. In addition, a human inspection is conducted to assure factors such as navigation and color contrasts meet web accessibility standards. See page 4 for complete accessibility grading criteria.

In addition to full ADA-compliance, the audit includes a 16-point checklist directly corresponding with the criteria set forth in Florida Statute Chapter 189.069. See page 5 for the complete compliance criteria checklist.

* **NOTE**: Because many CDD websites have links to PDFs that contain information required by law (meeting agendas, minutes, budgets, miscellaneous and ad hoc documents, etc.), audits include an examination of all associated PDFs. **PDF remediation** and ongoing auditing is critical to maintaining compliance.



ADA Website Accessibility

Result: PASSED

Accessibility Grading Criteria

Passed	Description
Passed	**Website errors*** **0** WCAG 2.1 errors appear on website pages causing issues**
Passed	**Keyboard navigation** The ability to navigate website without using a mouse
Passed	**Website accessibility policy** A published policy and a vehicle to submit issues and resolve issues
Passed	**Color contrast** Colors provide enough contrast between elements
Passed	**Video captioning** Closed-captioning and detailed descriptions
Passed	**PDF accessibility** Formatting PDFs including embedded images and non-text elements
Passed	**Site map** Alternate methods of navigating the website

*Errors represent less than 5% of the page count are considered passing
**Error reporting details are available in your Campus Suite Website Accessibility dashboard

Florida F.S. 189.069 Requirements

Result: PASSED

Compliance Criteria

Passed	Description
Passed	Full Name and primary contact specified
Passed	Public Purpose
Passed	Governing body Information
Passed	Fiscal Year
Passed	Full Charter (Ordinance and Establishment) Information
Passed	CDD Complete Contact Information
Passed	District Boundary map
Passed	Listing of taxes, fees, assessments imposed by CDD
Passed	Link to Florida Commission on Ethics
Passed	District Budgets (Last two years)
Passed	Complete Financial Audit Report
Passed	Listing of Board Meetings
Passed	Public Facilities Report, if applicable
Passed	Link to Financial Services
Passed	Meeting Agendas for the past year, and 1 week prior to next

Accessibility overview

Everyone deserves equal access.

With nearly 1-in-5 Americans having some sort of disability – visual, hearing, motor, cognitive – there are literally millions of reasons why websites should be fully accessible and compliant with all state and federal laws. Web accessibility not only keeps board members on the right side of the law, but enables the entire community to access all your web content. The very principles that drive accessible website design are also good for those without disabilities.

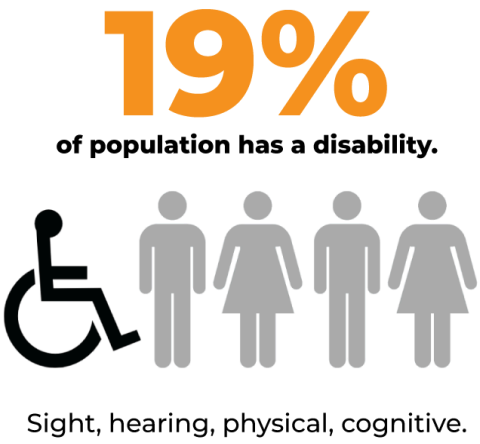

The legal and right thing to do

Several federal statutes (American Disabilities Act, Sec. 504 and 508 of the Rehabilitation Act of 1973) require public institutions to ensure they are not discriminating against individuals on the basis of a person's disability. Community websites are required to conform to web content accessibility guidelines, WCAG 2.1, the international standard established to keep websites barrier-free. Plain and simple, any content on your website must be accessible to everyone.



ADA Compliance Categories

Most of the problems that occur on a website fall in one or several of the following categories.



Contrast and colors

Some people have vision disabilities that hinder picking up contrasts, and some are color blind, so there needs to be a distinguishable contrast between text and background colors. This goes for buttons, links, text on images – everything. Consideration to contrast and color choice is also important for extreme lighting conditions.

Contract checker: *http://webaim.org/resources/contrastchecker*



Using semantics to format your HTML pages

When web page codes are clearly described in easy-to-understand terms, it enables broader sharing across all browsers and apps. This 'friendlier' language not only helps all the users, but developers who are striving to make content more universal on more devices.



Text alternatives for non-text content

Written replacements for images, audio and video should provide all the same descriptors that the non-text content conveys. Besides helping with searching, clear, concise word choice can make vivid non-text content for the disabled.

Helpful article: *http://webaim.org/techniques/alttext*



Ability to navigate with the keyboard

Not everyone can use a mouse. Blind people with many with motor disabilities have to use a keyboard to make their way around a

website. Users need to be able to interact fully with your website by navigating using the tab, arrows and return keys only. A “skip navigation” option is also required. Consider using WAI-ARIA for improved accessibility, and properly highlight the links as you use the tab key to make sections.

Helpful article: *www.nngroup.com/articles/keyboard-accessibility*
Helpful article: *http://webaim.org/techniques/skipnav*



Easy to navigate and find information

Finding relevant content via search and easy navigation is a universal need. Alt text, heading structure, page titles, descriptive link text (no ‘click here’ please) are just some ways to help everyone find what they’re searching for. You must also provide multiple ways to navigate such as a search and a site map.

Helpful article: *http://webaim.org/techniques/sitetools/*



Properly formatting tables

Tables are hard for screen readers to decipher. Users need to be able to navigate through a table one cell at a time. In addition to the table itself needing a caption, row and column headers need to be labeled and data correctly associated with the right header.

Helpful article: *http://webaim.org/techniques/tables/data*



Making PDFs accessible

PDF files must be tagged properly to be accessible, and unfortunately many are not. Images and other non-text elements within that PDF also need to be ADA-compliant. Creating anew is

one thing; converting old PDFs – called PDF remediation – takes time.

Helpful articles: *http://webaim.org/techniques/acrobat/acrobat*



Making videos accessible

Simply adding a transcript isn't enough. Videos require closed captioning and detailed descriptions (e.g., who's on-screen, where they are, what they're doing, even facial expressions) to be fully accessible and ADA compliant.

Helpful article: *http://webaim.org/techniques/captions*



Making forms accessible

Forms are common tools for gathering info and interacting. From logging in to registration, they can be challenging if not designed to be web-accessible. How it's laid out, use of labels, size of clickable areas and other aspects need to be considered.

Helpful article: *http://webaim.org/techniques/forms*



Alternate versions

Attempts to be fully accessible sometimes fall short, and in those cases, alternate versions of key pages must be created. That is, it is sometimes not feasible (legally, technically) to modify some content. These are the 'exceptions', but still must be accommodated.



Feedback for users

To be fully interactive, your site needs to be able to provide an easy way for users to submit feedback on any website issues. Clarity is

key for both any confirmation or error feedback that occurs while engaging the page.



Other related requirements

No flashing

Blinking and flashing are not only bothersome, but can be disorienting and even dangerous for many users. Seizures can even be triggered by flashing, so avoid using any flashing or flickering content.

Timers

Timed connections can create difficulties for the disabled. They may not even know a timer is in effect, it may create stress. In some cases (e.g., purchasing items), a timer is required, but for most school content, avoid using them.

Fly-out menus

Menus that fly out or down when an item is clicked are helpful to dig deeper into the site's content, but they need to be available via keyboard navigation, and not immediately snap back when those using a mouse move from the clickable area.

No pop-ups

Pop-up windows present a range of obstacles for many disabled users, so it's best to avoid using them altogether. If you must, be sure to alert the user that a pop-up is about to be launched.

Web Accessibility Glossary

Assistive technology	Hardware and software for disabled people that

	enable them to perform tasks they otherwise would not be able to perform (e..g., a screen reader)
WCAG 2.0	Evolving web design guidelines established by the W3C that specify how to accommodate web access for the disabled
504	Section of the Rehabilitation Act of 1973 that protects civil liberties and guarantees certain rights of disabled people
508	An amendment to the Rehabilitation Act that eliminates barriers in information technology for the disabled
ADA	American with Disabilities Act (1990)
Screen reader	Software technology that transforms the on-screen text into an audible voice. Includes tools for navigating/accessing web pages.
Website accessibility	Making your website fully accessible for people of all abilities
W3C	World Wide Web Consortium – the international body that develops standards for using the web

Tab 6

Sprinkler Solutions of Florida

License #: SCC131152611

401 N. Parsons Ave Suite 106-A
Brandon, FL 33510

813-503-1228

admin@ssofla.com

Estimate #68793

SENT

WatersEdge CDD

9142 Creedmoor Lane
New Port Richey, Florida 34654

Date: Jun 28, 2026
Expiration Date: Jul 26, 2026
Status: Sent
Payment Terms: 10 Days Net

Notes:

7.5HP Pond Fill Pump
This estimate includes all labor, materials, and equipment required to reconfigure the existing pump station for its intended use as a pond recharge pump station.

During inspection, it was determined that the existing Cycle Stop Valve (CSV) has failed and is no longer regulating low-flow conditions as designed. This failure prevents the system from maintaining proper operating pressure during reduced flow demand and can lead to excessive pump cycling, reduced equipment life, and unreliable system performance. Additionally, the existing Pressure Vacuum Breaker (PVB) is leaking and has reached the end of its serviceable life, requiring replacement to restore proper operation.

As part of this project, Sprinkler Solutions of Florida will:

Remove the existing failed Cycle Stop Valve and install a new properly sized Cycle Stop Valve.
Remove and replace the leaking Pressure Vacuum Breaker (PVB).
Remove the existing bladder tank and pressure switch, as these components are not required for the pump station's intended operation as a pond recharge system.
Reconfigure and modify the pump station piping and controls to provide a simplified and reliable configuration specifically designed for pond recharge applications.
Install all required fittings, valves, gauges, and miscellaneous materials necessary to complete the reconfiguration in accordance with irrigation industry standards.
Test and commission the pump station upon completion to verify proper operation, pressure regulation, and system performance.

Once completed, the pump station will be configured specifically for pond recharge service, reducing unnecessary components, improving operational reliability, and minimizing future maintenance requirements while providing consistent pump performance under varying flow conditions.

Replace failed Cycle Stop and Leaking Backflow Device

Rebuild Pump Station for recharge vs Pressure

Item	Unit Price	Quantity	Amount

Item	Unit Price	Quantity	Amount
2" PVB 2" Pressure Vacuum Breaker (PVB) Handles up to 150 PSI working pressure for reliable operation in demanding irrigation systems Rated for water temperatures up to 110°f, suitable for standard irrigation environments Threaded ansi b1.20.1 end connections allow easy installation and replacement Designed for installation on irrigation water lines to protect against backsiphonage of contaminated water into the potable water supply. Assembly shall provide protection where a potential health hazard exists.	$1,877.53	1	$1,877.53
2" cycle stop valve threaded 2" cycle stop valve threaded	$1,556.07	1	$1,556.07
1 1/4" Union Galvanized 1 1/4" Galvanized union Model: Galvanized	$72.07	1	$72.07
Misc 1 1/4" Galvanized Nipples	$75.00	1	$75.00
4" PVC Pipe Sch 40 White Pipe Bell End PVC Pipe 4 "Bell End SCH 40	$6.52	5	$32.60
4" Sch 40 90 Sch 40 PVC 90 Degree Elbow 4" Socket	$31.22	1	$31.22
4" x 2" SxT Bushing Sch 40 PVC Reducer Bushing Flush Style 4" x 2" Spigot x FIPT	$25.83	1	$25.83
Pump Tech Pump Tech	$600.00	1	$600.00

Thank you for your business!

Total	**$4,270.32**

Tab 7

MINUTES OF MEETING

Each person who decides to appeal any decision made by the Board with respect to any matter considered at the meeting is advised that the person may need to ensure that a verbatim record of the proceedings is made, including the testimony and evidence upon which such appeal is to be based.

WATERS EDGE
COMMUNITY DEVELOPMENT DISTRICT

The regular meeting of the Board of Supervisors of Waters Edge Community Development District to be held on **Thursday, June 25, 2026, at 5:00 p.m.** at the Waters Edge Clubhouse, located at 9019 Creedmoor Lane, New Port Richey, FL 34654.

Present and constituting a quorum:

Ken Smith	**Board Supervisor, Chairman**
George Anastasopoulos	**Board Supervisor, Vice Chairman**
Craig Pettitt	**Board Supervisor, Assistant Secretary**
Dan Knoblock	**Board Supervisor, Assistant Secretary**

Also present were:

Lisa Castoria	**District Manager, Rizzetta & Co., Inc.**
Whitney Sousa	**District Counsel, Straley, Robin & Vericker (via phone)**
Frank Nolte	**District Engineer, Stantec (via phone)**
Jeff Hewitt	**Sprinkler Solutions**
Audience	**Not Present**

FIRST ORDER OF BUSINESS **Call to Order**

Ms. Castoria called the meeting to order at 5:00 p.m. and confirmed there was a quorum.

SECOND ORDER OF BUSINESS **Audience Comments on Agenda Items**

There were no audience members present.

DRAFT

THIRD ORDER OF BUSINESS **Staff Reports**

A. Aquatics Managers Monthly Report

The Board reviewed the monthly aquatics report. There were no comments at this time.

B. Irrigation Report

The Board held a discussion on a resident request for assistance with irrigation and findings of the inspection areas. Mr. Hewitt requested permission to perform a system flush and the HOA is requesting access to controls to the irrigation. The Board would like Sprinkler Solutions to be the only one with control access to irrigation.

There was a discussion on SWFWMD water restrictions being extended until 10/1/2026.

C. District Engineer

The Board reviewed the engineer's report.

i. Update on Dumping at 10940 Oyster Bay Circle

This item has been tabled to the July meeting.

The Board held a discussion on resident request for CDD to maintain the large hedge adjacent to his property at 11623 Manistique Way. It was noted that this hedge was not planted by the CDD or intended as a landscape feature. The Board requests that the resident be given permission to hire a licensed/insured vendor to remove or maintain the hedge or the resident may trim the hedge that is encroaching onto their property.

Mr. Nolte gave a quick update on jet/vacuum and temporary hydrant meter access provided.

D. PSA Inspection Reports

The Board reviewed the PSA report. There were no questions or comments at this time.

E. District Counsel

No Report

F. District Manager

Ms. Castoria advised that the next meeting is scheduled for July 23, 2026, at 5:00 pm and reviewed the monthly report with the Board.

DRAFT

FOURTH ORDER OF BUSINESS **Consideration of Belle Haven Landscape Lighting Proposals**

After a brief discussion, the Board agreed to hold a workshop meeting to further discussion landscape lighting.

FIFTH ORDER OF BUSINESS **Consideration of Stantec Storm Pipe Jet-Vac Proposal**

> On a motion by Mr. Pettitt, seconded by Mr. Anastasopoulos, with all in favor, the Board of Supervisors approved the Stantec Storm Pipe Jet-Vac Proposal in the amount of $2,800, for Waters Edge Community Development District.

SIXTH ORDER OF BUSINESS **Ratification of Pasco County Hydrant Meter Request**

> On a motion by Mr. Smith, seconded by Mr. Pettitt, with all in favor, the Board of Supervisors ratified the Pasco County Hydrant Meter Request, for Waters Edge Community Development District.

SEVENTH ORDER OF BUSINESS **Review of Grau and Associates Audit Response for FY 24-25**

The Board reviewed this response and had no questions or concerns at this time.

EIGHTH ORDER OF BUSINESS **Discussion on Educational Workshop on Irrigation for Residents**

The Board held a discussion on holding an Educational Workshop on Irrigation for Residents. They agreed to hold a workshop for this on July 25, 2026 at 10:00 a.m.

> On a motion by Mr. Pettitt, seconded by Mr. Anastasopoulos, with all in favor, the Board of will hold an Educational Workshop on Irrigation for Residents on July 25, 2026 at 10:00 a.m., for Waters Edge Community Development District.

They also discussed and agreed to hold a workshop for Landscape Lighting on July 20, 2026 at 10:00 a.m.

> On a motion by Mr. Pettitt, seconded by Mr. Anastasopoulos, with all in favor, the Board of will hold a Landscape Lighting Workshop on July 20, 2026 at 10:00 a.m., for Waters Edge Community Development District.

DRAFT

NINTH ORDER OF BUSINESS **Consideration of the Minutes of the Board of Supervisors' Regular Meeting held on May 28, 2026**

> On a motion by Mr. Smith, seconded by Mr. Knoblock, with all in favor, the Board of Supervisors approved the minutes for the regular meeting that was held on May 28, 2026, as presented, for Waters Edge Community Development District.

TENTH ORDER OF BUSINESS **Consideration of Operation and Maintenance Expenditures for May 2026**

> On a motion by Mr. Anastasopoulos, seconded by Mr. Smith, with all in favor, the Board of Supervisors ratified the operation and maintenance expenditures for May 2026 ($31,625.31), for Waters Edge Community Development District.

ELEVNTH ORDER OF BUSINESS **Audience Comments & Supervisor Requests**

Mr. Anastasopoulos voiced his concerns with the current fencing options that were previously approved. After a brief discussion, a motion was made to appoint Mr. Pettitt to work with DDD on choosing new fencing options.

> On a motion by Mr. Anastasopoulos, seconded by Mr. Smith, with all in favor, the Board of Supervisors appoint Mr. Pettitt to work with DDD on choosing new fencing options for Waters Edge Community Development District.

TWELFTH ORDER OF BUSINESS **Adjournment**

> On a motion by Mr. Pettitt, seconded by Mr. Smith, with all in favor, the Board of Supervisors adjourned the meeting at 6:28 p.m., for Waters Edge Community Development District.

_____ _____

Secretary/Assistant Secretary Chairman/Vice Chairman

DRAFT

Tab 8

Waters Edge Community Development District

District Office · Tampa, Florida · (813) 933-5771
Mailing Address · 3434 Colwell Avenue, Suite 200, Tampa · Florida 33614
www.watersedgecdd.org

Operations and Maintenance Expenditures
June 2026
For Board Approval

Attached please find the check register listing the Operation and Maintenance expenditures paid from June 1, 2026 through June 30, 2026. This does not include expenditures previously approved by the Board.

The total items being presented: **$39,596.02**

Approval of Expenditures:

_____

_____ Chairperson

_____ Vice Chairperson

_____ Assistant Secretary

Waters Edge Community Development District

Paid Operation & Maintenance Expenditures

June 1, 2026 Through June 30, 2026

Vendor Name	Check Number	Invoice Number	Invoice Description	Invoice Amount
Craig J. Pettitt	300288	CP052826-345	Board of Supervisors Meeting 05/28/26	$ 200.00
Craig J. Pettitt	300302	CP062526-345	Board of Supervisors Meeting 06/25/26	$ 200.00
Danny Knoblock	300289	DK052826-345	Board of Supervisors Meeting 05/28/26	$ 200.00
Danny Knoblock	300303	DK062526-345	Board of Supervisors Meeting 06/25/26	$ 200.00
Enumerate	300297	INV62528	Website Compliance & Management 06/26	$ 217.25
Florida Jetclean	300299	16454	Maintenance & Repair 05/26	$ 2,400.00
Gabriel D Papadopoulos	300290	GP052826-345	Board of Supervisors Meeting 05/28/26	$ 200.00
George Anastasopoulos	300291	GA052826-345	Board of Supervisors Meeting 05/28/26	$ 200.00
George Anastasopoulos	300304	GA062526-345	Board of Supervisors Meeting 06/25/26	$ 200.00
GHS Environmental LLC	300293	2026-395	Irrigation Maintenance & Repair 05/26	$ 150.00
High Trim, LLC	300301	7087	Landscape Replacement 06/26	$ 1,975.00
Kenneth J Smith, II.	300292	KS052826-345	Board of Supervisors Meeting 05/28/26	$ 200.00

Waters Edge Community Development District

Paid Operation & Maintenance Expenditures

June 1, 2026 Through June 30, 2026

Vendor Name	Check Number	Invoice Number	Invoice Description	Invoice Amount
Kenneth J Smith, II.	300305	KS062526-345	Board of Supervisors Meeting 06/25/26	$ 200.00
Pasco County Utilities	20260603-1	24470469	Water Services 04/26	$ 2,171.19
Pasco County Utilities	20260618-1	345-061226	Stormwater System Maintenance 06/26	$ 2,355.00
Rizzetta & Company, Inc.	300287	INV0000109933	Accounting Services 06/26	$ 4,671.42
Sitex Aquatics, LLC	300294	11136-b	Lake Maintenance 06/26	$ 2,250.55
Sprinkler Solutions of Florida, Inc.	300285	68614	Irrigation Repair 05/26	$ 465.36
Sprinkler Solutions of Florida, Inc.	300295	68654	Irrigation Maintenance & Repair 06/26	$ 1,800.00
Sprinkler Solutions of Florida, Inc.	300300	68659	Irrigation Maintenance & Repair 06/26	$ 1,000.00
Straley Robin Vericker	300298	28475	Legal Services 05/26	$ 414.00
Waters Edge Master HOA, Inc.	300286	345-050126	Landscape Maintenance 04/26	$ 8,079.82
Waters Edge Master HOA, Inc.	300296	345-060126	Landscape Maintenance 05/26	$ 8,079.82
Withlacoochee River Electric Cooperative, Inc.	20260312-1	2189378-052726	Electric Services 05/26	$ 63.78

Waters Edge Community Development District

Paid Operation & Maintenance Expenditures

June 1, 2026 Through June 30, 2026

Vendor Name	Check Number	Invoice Number	Invoice Description	Invoice Amount
Withlacoochee River Electric Cooperative, Inc.	20260312-1	2189381-052726	Electric Services 05/26	$ 103.80
Withlacoochee River Electric Cooperative, Inc.	20260312-1	2189382-052726	Electric Services 05/26	$ 131.72
Withlacoochee River Electric Cooperative, Inc.	20260312-1	2189384-052726	Electric Services 05/26	$ 1,467.31
Report Total				**$ 39,596.02**

Waters Edge CDD

Meeting Date: May 28, 2026

SUPERVISOR PAY REQUEST

Name of Board Supervisor	Check if paid
Craig Pettitt	x
George Anastasopoulos	x
Gabriel Papadopoulos	x
Ken Smith	x
Danny Knoblock	x

NOTE: Supervisors are only paid if checked.

EXTENDED MEETING TIMECARD

Meeting Start Time:	**3:30pm**
Meeting End Time:	**4:10pm**
Total Meeting Time:	

Time Over 3 Hours:	

Total at $175 per Hour:	

ADDITIONAL OR CONTINUED MEETING TIMECARD

~~Meeting Date:~~	
~~Additional or Continued Meeting?~~	
~~Total Meeting Time:~~	
~~Total at $175 per Hour:~~	

~~Business Mileage Round Trip~~	
~~IRS Rate per Mile~~	~~$0.655~~
~~Mileage to Charge~~	

DM Signature: Sean Craft

Waters Edge CDD Budget Workshop

Meeting Date: June 25, 2026

SUPERVISOR PAY REQUEST

Name of Board Supervisor	Check if paid
Craig Pettitt	**yes**
George Anastasopoulos	**yes**
Gabriel Papadopoulos	
Ken Smith	**yes**
Danny Knoblock	**yes**

NOTE: Supervisors are only paid if checked.

EXTENDED MEETING TIMECARD

Meeting Start Time:	**5:00 PM**
Meeting End Time:	**6:28 PM**
Total Meeting Time:	**1hr 28 min**

Time Over 3 Hours:	

Total at $175 per Hour:	

ADDITIONAL OR CONTINUED MEETING TIMECARD

~~Meeting Date:~~	
~~Additional or Continued Meeting?~~	
~~Total Meeting Time:~~	
~~Total at $175 per Hour:~~	

~~Business Mileage Round Trip~~	
~~IRS Rate per Mile~~	~~$0.655~~
~~Mileage to Charge~~	

DM Signature: Lisa Castoria _____

ENUMERATE

P.O. Box 952684
Atlanta GA 31192-2684
United States

Invoice

Invoice #: INV62528
Status: Open

Bill To

WatersEdge CDD
3434 COLWELL AVE.SUITE 200
Tampa FL 33614
United States

Date	Terms	Due Date
6/4/2026		6/4/2026

Item	Qty	Rate	Amount
Engage SMA Subscription Fee Service Period 6/4/2026 - 7/3/2026	1	$217.25	$217.25
Engage SMA Per Door Service Period 6/4/2026 - 7/3/2026	1	$0.00	$0.00

Subtotal	$217.25
Tax Total (%)	$0.00
Total	$217.25
Amount Due	$217.25



To pay by check, use remit address below:

Enumerate
PO Box 952684
ATLANTA GA 31192-2684

For billing inquires, please email: billingteam@goenumerate.com

Invoice

Florida Jetclean - Jetclean America
1660 Sea Breeze Drive
Tarpon Springs, FL 34689
800-226-8013

Svc Date	Due Date	Invoice #
5/22/2026	6/21/2026	16454

Bill To	Ship To
Water's Edge CDD P.O. Box 32414 Charlotte, NC 28232	Castine Street New Port Richey, FL 34654

P.O. No.	Terms	Project Information
Frank Nolte	Net 30	Storm Pipe Video Inspect

Date(s)	Description	Amount
5/22/26	Pipeline video-inspection truck and crew for visual evaluation of 18” RCP storm inlet(s) and piping to attempt find location of blockage, as instructed, and per approved proposal. *** Report and Videos Sent To Frank Nolte Via Download Link ***	2,400.00

Total **$2,400.00**

Thank you for your business.

- PLEASE NOTE OUR NEW ADDRESS!

- ALL MAJOR CREDIT CARDS ACDEPTED WITH 4.5% PROCESSING FEE.

Invoice

www.ghsenvironmental.com
P.O. Box 55802
St Petersburg, FL 33732

Date: 6/3/2026
Invoice #: 2026-395

To:

Waters Edge CDD
5844 Old Pasco Rd.
Suite 100
Wesley Chapel, Fl 33544

Project: Waters Edge
Proposal #: 13-124;2026
P.O. #:

Due Date	Service Date:
7/3/2026	May 2026

Task #	Description	Project Compl...	Amount
Task 1	Monthly Meter Readings ($150/month)	41.67%	150.00

PAYMENT DUE WITHIN 30 DAYS OF INVOICING DATE	**Total**	**$150.00**
Please make all checks payable to GHS Environmental There will be a 10% charge per month on any payments received after the initial 30 days. If you have any questions concerning this invoice please contact us at 727-667-6786. THANK YOU FOR YOUR BUSINESS!	**Payments/Credits**	**$0.00**
	Balance Due	**$150.00**

INVOICE #7087

ISSUED:
06/12/2026

DUE:
06/12/2026

RECIPIENT:

Waters Edge CDD

3434 Colwell Ave
Unit 200
Tampa, FL 33614

SERVICE ADDRESS:

11648 Biddeford Place
New Port Richey, Florida 34654

SENDER:

High Trim LLC

15036 U.S. 19 N
Hudson, Florida 34667

Phone: 727-514-3889
Email: manager@hightrimtreeservice.com
Website: www.hightrimtreeservice.com

PAST DUE

For Services Rendered

Product/Service	Description	Qty.	Unit Price	Total
06/12/2026				
Tree Removal	Removal of tree cluster located on the edge of the pond cut flush no stump grind Approximately 40 small trees	1	$1,850.00	$1,850.00*
Disposal fee		1	$125.00	$125.00

Total **$1,975.00**

* Non-taxable

Thank you for your business. Please contact us with any questions regarding this invoice.
Late payment Warning: If we do not receive your payment within 15 days, You will have to pay a late fee of 5%. A 5% late fee will be added every 30 days you are late.

Pay Now

PASCO COUNTY UTILITIES
CUSTOMER INFORMATION & SERVICES
P.O. BOX 2139
NEW PORT RICHEY, FL 34656-2139

LAND O' LAKES (813) 235-6012
NEW PORT RICHEY (727) 847-8131
DADE CITY (352) 521-4285

UtilCustServ@MyPasco.net
Pay By Phone: 1-855-786-5344

1 0 1
45-46024

WATERS EDGE CDD

Service Address: **9019 CREEDMOOR LANE RECLAIM**
Bill Number: 24470469
Billing Date: 5/13/2026
Billing Period: 3/20/2026 to 4/21/2026

Account #	Customer #
1006710	01381392

Please use the 15-digit number below when making a payment through your bank

100671001381392

New Water, Sewer, Reclaim rates, fees, and charges took effect Oct. 1, 2025. Please visit bit.ly/pcurates for details.

Service	Meter #	Previous		Current		# of Days	Consumption in thousands
		Date	Read	Date	Read		
Reclaim	180194286	3/20/2026	542415	4/21/2026	559293	32	16878

Usage History

Water	
April 2026	16878
March 2026	12448
February 2026	12447
January 2026	10217
December 2025	12570
November 2025	9605
October 2025	14603
September 2025	13369
August 2025	12087
July 2025	12160
June 2025	16094
May 2025	16344

Transactions

Previous Bill		6,099.52
Payment 04/30/26		-6,099.52 CR
Payment 05/01/26		-6,099.03 CR
Balance Forward		-6,099.03 CR
Current Transactions		
Reclaimed		
Reclaimed	16,878 Thousand Gals X $0.49	8,270.22
Total Current Transactions		8,270.22
TOTAL BALANCE DUE		**$2,171.19**

Annual Water Quality Report: The 2025 Consumer Confidence Report is available online at bit.ly/PascoRegional2025. To request a paper copy, please call (813) 929-2733.

Please return this portion with payment

TO PAY ONLINE, VISIT pascoeasypay.pascocountyfl.net

☐ Check this box if entering change of mailing address on back.

Account #	1006710
Customer #	01381392
Balance Forward	-6,099.03 CR
Current Transactions	8,270.22
Total Balance Due	**$2,171.19**
Due Date	**6/1/2026**

10% late fee will be applied if paid after due date

The Total Due will be electronically transferred on 06/01/2026.

WATERS EDGE CDD
3434 COLWELL AVENUE SUITE 200
TAMPA FL 33614-8390

PASCO COUNTY UTILITIES
CUSTOMER INFORMATION & SERVICES
P.O. BOX 2139
NEW PORT RICHEY, FL 34656-2139

345-061226

WATERS EDGE COMMUNITY DEVELOPMENT DISTRICT

DISTRICT OFFICE · 5844 OLD PASCO ROAD · SUITE 100 · WESLEY CHAPEL, FLORIDA 33544

Amount: $2355.00

Project: Waters Edge CDD

Date: June 12, 2026

Payable to: Pasco County Utilities Administration Building
C/O Dermedrix White

Address: 19420 Central Boulevard
Land O Lakes, FL 34637

Reason: **Hydrant Meter Hookup/Storm water maintenance**

Requestor: Lisa Castoria

Directions for Check: Please mail check to the address above and include the email that was sent, as Frank Nolte requested.

Rizzetta & Company, Inc.
3434 Colwell Avenue
Suite 200
Tampa FL 33614

Invoice

Date	Invoice #
6/2/2026	INV0000109933

Bill To:

WATERS EDGE CDD - PC
3434 Colwell Avenue, Suite 200
Tampa FL 33614

Services for the month of	Terms	Client Number
June	Upon Receipt	00345

Description	Qty	Rate	Amount
Accounting Services	1.00	$1,397.00	$1,397.00
Administrative Services	1.00	$443.00	$443.00
Email Accounts, Admin & Maintenance	5.00	$20.00	$100.00
Financial & Revenue Collections	1.00	$491.67	$491.67
Management Services	1.00	$2,139.75	$2,139.75
Website Compliance & Management	1.00	$100.00	$100.00

Subtotal	$4,671.42
Total	$4,671.42

INVOICE

Sitex Aquatics, LLC
PO Box 917
Parrish, FL 34219

office@sitexaquatics.com
+1 (813) 564-2322

Bill to
Waters Edge CDD
3434 Colwell Ave, Ste 200
Tampa, FL 33614

Invoice details
Invoice no.: 11136-b
Terms: Net 30
Invoice date: 06/01/2026
Due date: 07/01/2026

#	Date	Product or service	Description	Qty	Rate	Amount
1.		**Aquatic Maintenance**	Monthly Lake Maintenance-52 Waterways	1	$2,185.00	$2,185.00
2.		**Additional Services**	Temporary Fuel Surcharge	1	$65.55	$65.55

Total **$2,250.55**

Ways to pay

BANK

View and pay



Sprinkler Solutions of Florida

License #: SCC131152611

401 N. Parsons Ave Suite 106-A
Brandon, FL 33510

813-503-1228

admin@ssofla.com

Invoice #68614

INVOICED

WatersEdge CDD

(813) 933-5571

11416 Belle Haven Drive
New Port Richey, Florida 34654

Job Title: Pump kept shutting off

Job Location: Belle Haven Pump Station

Job Location Address: 11416 Belle Haven Drive New Port Richey, Florida 34654

Job Members: Mike Powers

Invoiced Date: May 27, 2026

Due Date: Jun 6, 2026

Status: Invoiced

Date of Service: Apr 30, 2026

Payment Terms: 10 Day Net

Notes:

2023F350DRW
Mike P

Talked to Kevin on the phone when I arrived on site. He told me the Belle Haven well wasn't running consistently so I told him I'd check that out. I also informed him the totalizer had been added to the pump station screen so the meter reading for the main pump station can now be taken going forward. Kevin asked about when we'll be able to have the main pump station running for test days, Jeff is going to talk to him about that. I adjusted main pump station pressure from 75 to 78PSI and added 2 tabs of chlorine to each of the 6 filter tanks. After checking out both wells I adjusted parameters on the Belle Haven well and the pump is not cycling like it was before. I kicked both wells on with new Hunter I2C controller by the main pump station. I went over to both Biddeford, and Belle Haven wells to ensure they both kicked on and were up to pressure. Both showed they were running between 65-70PSI. To confirm, I turned on a big rotor zone, and big spray zone at the sam

Pump kept shutting off

Investigate

Item	Unit Price	Amount
Trip Charge Pump Tech	$135.00	$135.00
Service Dispatch Includes mobilization of service vehicle, scheduling, administrative processing, and transportation of tools and diagnostic equipment required to respond to the site and perform on-site irrigation system evaluation and service.		

Item	Unit Price	Amount
Pump Tech Pump Tech	$150.00	$300.00
Fuel Fuel Sur Charge based on current pricing (Port to Port)	$0.23	$30.36

Thank you for your business!

Total	**$465.36**
Amount Paid	**$0.00**
Amount Due	**$465.36**



Sprinkler Solutions of Florida

License #: SCC131152611

401 N. Parsons Ave Suite 106-A
Brandon, FL 33510

813-503-1228

admin@ssofla.com

Invoice #68654

INVOICED

WatersEdge CDD
(813) 933-5571

Invoiced Date: Jun 2, 2026
Due Date: Jun 12, 2026
Status: Invoiced
Payment Terms: 10 Day Net

Water Meter Removals

Multiple Locations

Item
Waters Edge CDD Meter Removal 11412 Biddeford Pl
Waters Edge CDD Meter Removal 11227 Shelter Cove Loop
Waters Edge CDD Meter Removal 11423 Tayport Loop
Waters Edge CDD Meter Removal 11066 Bremerton Ct
Waters Edge CDD Meter Removal 8616 Tenbridge Way

Item
Waters Edge CDD Meter Removal 11116 Ragsdale Ct
Waters Edge CDD Meter Removal 11026 Belle Haven
Waters Edge CDD Meter Removal 11406 Ragsdale Ct
Waters Edge CDD Meter Removal 8923 New ALexandria Loop

Thank you for your business!

Total	**$1,800.00**
Amount Paid	**$0.00**
Amount Due	**$1,800.00**



Sprinkler Solutions of Florida

License #: SCC131152611

401 N. Parsons Ave Suite 106-A
Brandon, FL 33510

813-503-1228

admin@ssofla.com

Invoice 68659

INVOICED

WatersEdge CDD

(813) 933-5571

9142 Creedmoor Lane
New Port Richey, Florida 34654

Invoiced Date: Jun 11, 2026

Due Date: Jun 21, 2026

Status: Invoiced

Date of Service: Feb 26, 2026

Project/Reference #: Semi Annual Pump Maintenance

Payment Terms: 10 Days Net

Notes:

Biddeford - 25HP Sub
Franklin Cerus X-Drive
- model CXD-090A-2V

Set Point - Changed from 65 to 68PSI.
Power Service - 3PH 230v
Power no load - 248/245/246 - 124/124/212
Power full load - 244/242/242 - 122/122/210
Amps
B - 63
R - 61
Y - 63
Pressure Tank - Found at 36, pumped up to 40 now.
Cleaned both panel filters and inside panel.
Tightened all wire connections.
Fixed conduit for incoming power that was disconnected on each end as it went into panel and came out of the ground.

Belle Haven - 25HP Sub
Grundfos Drive
Set Point - 70PSI. (I changed it yesterday)
Power Service - 3PH 480v
Power no load - 490/494/493 - 285/283/284
Power full load - 490/493/493 - 283/284/283
Amps
B - 30
R - 28
Y - 28
Pressure tank - Found at 39.5, got it up to 40PSI.
Tightened all wire connections.
Replaced failed pressure gauge. (0-100PSI)

Semi Annual Pump Maintenance

Serviced Auxiliary Pumps located at Biddeford, Belle Haven and small pump at Creedmore.

Item
Watersedge Small Pump Maintenance Watersedge Small Pump Maintenance Invoice .... Waters Edge Pump Station, Creedmoor Ln Pump Station, Waters Edge Pump Station

Thank you for your business!

Total	**$1,000.00**
Amount Paid	**$0.00**
Amount Due	**$1,000.00**

Straley Robin Vericker

1510 W. Cleveland Street

Tampa, FL 33606
Telephone (813) 223-9400
Federal Tax Id. - 20-1778458

Waters Edge CDD
P.O. Box 32414
Charlotte, NC 28232

June 04, 2026
Client: 001219
Matter: 000001
Invoice #: 28475

RE: GENERAL

For Professional Services Rendered Through May 31, 2026

SERVICES

Date	Person	Description of Services	Hours	Amount
5/15/2026	MS	PREPARE CORRESPONDENCE TO DISTRICT MANAGEMENT RE REQUESTING THE STATUS OF THE FY 24/25 AUDIT AND REMINDING THEM OF THE JUNE 30TH DEADLINE.	0.1	$17.50
5/26/2026	CAW	REVIEW AGENDA AND PREPARE FOR MAY BOARD MEETING.	0.3	$91.50
5/27/2026	CAW	PREPARE FOR AND ATTEND PHONE CONFERENCE WITH DISTRICT MANAGER REGARDING MAY BOARD MEETING.	0.3	$91.50
5/28/2026	CAW	PREPARE FOR AND ATTEND MAY BOARD MEETING VIA PHONE.	0.7	$213.50
		Total Professional Services	1.4	$414.00

Total Services	$414.00	
Total Disbursements	$0.00	
Total Current Charges		$414.00
Previous Balance		$2,348.50
Less Payments		*($2,348.50)*
PAY THIS AMOUNT		**$414.00**

Please Include Invoice Number on all Correspondence

INVOICE

5/1/2026

Waters Edge Master HOA, Inc.
c/o Management and Associates
720 Brooker Creek Blvd. #206 Oldsmar, FL 34677
Phone: (813) 433-2000

To: LISA CASTORIA, AVID INVOICING

Waters Edge CDD
5844 Old Pasco Road, Suite 100
Wesley Chapel, FL 33544

Due Upon Receipt

Quantity	Vendor	Invoice #	Inv Date	Description		Amount
1	Ameriscape	201765	4/1/2026	APRIL LAWN SERVICE-GENERAL	$	5,811.48
		201765	4/1/2026	IRRIGATION INSPECTIONS	$	1,300.82
		201765	4/1/2026	HARDWOOD PRUNING	$	218.02
1	Ameriscape			QUARTERLY FLOWERS-	$	-
1	Ameriscape	201764	4/1/2026	PEST CONTROL (AGRONOMY)	$	497.48
1	PSA	1679	4/2/2026	APRIL 2 INSPECTION	$	252.00
0	KEVIN L	NA	NA	Chlorine tab service- $30.00/week- Kevin Labrum	$	-

Total: **8,079.82**

asi landscapes
A Yardnique Company

(727) 869-7329

INVOICE

Date	Invoice No.
04/01/26	TMT 201765
Terms	Due Date
Net 30	05/01/26

Amount Due	Customer PO #
$18,325.83	

BILL TO

Rocco Iervasi
Water's Edge HOA
9019 Creedmoor Lane
New Port Richey, FL 34654

PROPERTY

Water's Edge HOA

9019 Creedmoor Lane
New Port Richey, FL 34654

QTY	ITEM		LINE TOTAL
	#143127 - Landscape Management with Irrigation & Pruning April 2026	**$18,325.83**	**$18,325.83**

DESCRIPTION	Amount
General Landscape Maintenance	$ 14,528.71
Irrigation Services	$ 3,252.06
Hardwood Pruning	$ 545.06
Monthly Total	$ 18,325.83

Total	$18,325.83	$18,325.83
Applied Credits/Payments		$0.00
Balance Due		**$18,325.83**

Please detach the following and return to the remittance address with your payment.

---

team management

(727) 869-7329

INVOICE

Date	Invoice No.
04/01/26	TMT 201765
Terms	Due Date
Net 30	05/01/26

Please make sure you have the correct remittance address as this has recently been updated.

REMIT TO

Team Management c/o Yardnique
10014 Chapel Hill Road
Morrisville, NC 27560

PROPERTY

Water's Edge HOA

9019 Creedmoor Lane
New Port Richey, FL 34654

BALANCE DUE

$18,325.83

Current	1-30 Days Past Due	31-60 Days Past Due	61-90 Days Past Due	90+ Days Past Due
$19,569.54	$22,989.54	$0.00	$0.00	$0.00

team management

(727) 869-7329

INVOICE

Date	Invoice No.
04/01/26	TMT 201764
Terms	**Due Date**
Net 30	05/01/26

Amount Due	Customer PO #
$1,243.71	

BILL TO

Rocco Iervasi
Water's Edge HOA
9019 Creedmoor Lane
New Port Richey, FL 34654

PROPERTY

Water's Edge HOA

9019 Creedmoor Lane
New Port Richey, FL 34654

QTY	ITEM		LINE TOTAL
	#143124 - Landscape Management - Agronomy Program [Only] RENEWAL April 2026	**$1,243.71**	**$1,243.71**
	Total	$1,243.71	$1,243.71
	Applied Credits/Payments		$0.00
	Balance Due		**$1,243.71**

Please detach the following and return to the remittance address with your payment.

team management

(727) 869-7329

INVOICE

Date	Invoice No.
04/01/26	TMT 201764
Terms	**Due Date**
Net 30	05/01/26

Please make sure you have the correct remittance address as this has recently been updated.

REMIT TO

Team Management c/o Yardnique
10014 Chapel Hill Road
Morrisville, NC 27560

PROPERTY

Water's Edge HOA

9019 Creedmoor Lane
New Port Richey, FL 34654

BALANCE DUE

$1,243.71

Current	1-30 Days Past Due	31-60 Days Past Due	61-90 Days Past Due	90+ Days Past Due
$1,243.71	$22,989.54	$0.00	$0.00	$0.00

INVOICE

PSA Horticultural
8431 Prestwick Pl
Trinity, FL 34655

tom@psagrounds.com
+1 (727) 505-1532

PSA HORTICULTURAL

Bill to
Water's Edge Homeowners Association C/O
Management and Associates
720 Brooker Creek Boulevard, Suite 206
Oldsmar, Florida 34677

APR 0 6 2026

Invoice details
Invoice no.: 1679
Terms: Net 30
Invoice date: 04/02/2026
Due date: 05/02/2026

#	Date	Product or service	Description	Qty	Rate	Amount
1.	04/02/2026	**Water's Edge Landscape Inspection**	April 2026 Landscape Inspection	1	$630.00	$630.00

Total **$630.00**

Ways to pay

BANK

Note to customer

We truly appreciate your business!

PSA Services:
Specification Development
Landscape Inspections
Special Project Consulting

View and pay

APPROVED
ASSOC
G/L #
BK ACCT
AMT

INVOICE

6/1/2026

Waters Edge Master HOA, Inc.
c/o Management and Associates
720 Brooker Creek Blvd. #206 Oldsmar, FL 34677
Phone: (813) 433-2000

To: LISA CASTORIA, AVID INVOICING

Waters Edge CDD
5844 Old Pasco Road, Suite 100
Wesley Chapel, FL 33544

Due Upon Receipt

Quantity	Vendor	*Invoice #*	Inv Date	Description		Amount
1	Ameriscape	205433	5/1/2026	MAY LAWN SERVICE-GENERAL	$	5,811.48
		205433	5/1/2026	IRRIGATION INSPECTIONS	$	1,300.82
		205433	5/1/2026	HARDWOOD PRUNING	$	218.02
1	Ameriscape			QUARTERLY FLOWERS-	$	-
1	Ameriscape	205432	5/1/2026	PEST CONTROL (AGRONOMY)	$	497.48
1	PSA	1691	5/7/2026	MAY 7 LANDSCAPE INSPECTION	$	252.00
0	KEVIN L	NA	NA	Chlorine tab service- $30.00/week- Kevin Labrum	$	-
				Total:		**8,079.82**

asi landscapes
A Yardnique Company

(813) 498-3938

INVOICE

Date	Invoice No.
05/01/26	TMT 205433
Terms	**Due Date**
Net 30	05/31/26

Amount Due	Customer PO #
$18,325.83	

BILL TO

Rocco Iervasi
Water's Edge HOA
9019 Creedmoor Lane
New Port Richey, FL 34654

PROPERTY

Water's Edge HOA

9019 Creedmoor Lane
New Port Richey, FL 34654

QTY	ITEM		LINE TOTAL
	#143127 - Landscape Management with Irrigation & Pruning May 2026	**$18,325.83**	**$18,325.83**

DESCRIPTION	Amount
General Landscape Maintenance	$ 14,528.71
Irrigation Services	$ 3,252.06
Hardwood Pruning	$ 545.06
Monthly Total	$ 18,325.83

Total	$18,325.83	$18,325.83
Applied Credits/Payments		$0.00
Balance Due		**$18,325.83**

Please detach the following and return to the remittance address with your payment.

APPROVED
ASSOC WAED
G/L # 8210-007
BK ACCT
OPER RESV
AMT 18,325.83

asi landscapes
A Yardnique Company

(813) 498-3938

INVOICE

Date	Invoice No.
05/01/26	TMT 205433
Terms	**Due Date**
Net 30	05/31/26

Please make sure you have the correct remittance address as this has recently been updated.

REMIT TO

ASI Landscapes
9702 Harney Rd
Thonotosassa, FL 33592

PROPERTY

Water's Edge HOA

9019 Creedmoor Lane
New Port Richey, FL 34654

BALANCE DUE

$18,325.83

Current	1-30 Days Past Due	31-60 Days Past Due	61-90 Days Past Due	90+ Days Past Due
$39,954.64	$0.00	$0.00	$0.00	$0.00

asi landscapes
A Yardnique Company

(813) 498-3938

INVOICE

Date	Invoice No.
05/01/26	TMT 205432
Terms	**Due Date**
Net 30	05/31/26

Amount Due	Customer PO #
$1,243.71	

BILL TO
Rocco Iervasi
Water's Edge HOA
9019 Creedmoor Lane
New Port Richey, FL 34654

PROPERTY
Water's Edge HOA

9019 Creedmoor Lane
New Port Richey, FL 34654

QTY	ITEM		LINE TOTAL
	#143124 - Landscape Management - Agronomy Program [Only] RENEWAL May 2026	**$1,243.71**	**$1,243.71**
	Total	$1,243.71	$1,243.71
	Applied Credits/Payments		$0.00
	Balance Due		**$1,243.71**

APPROVED
ASSOC WDED
G/L # 8210-007
BK ACCT
OPER RESV
AMT 1243.71

Please detach the following and return to the remittance address with your payment.

asi landscapes
A Yardnique Company

(813) 498-3938

INVOICE

Date	Invoice No.
05/01/26	TMT 205432
Terms	**Due Date**
Net 30	05/31/26

Please make sure you have the correct remittance address as this has recently been updated.

REMIT TO
ASI Landscapes
9702 Harney Rd
Thonotosassa, FL 33592

PROPERTY
Water's Edge HOA

9019 Creedmoor Lane
New Port Richey, FL 34654

BALANCE DUE
$1,243.71

Current	1-30 Days Past Due	31-60 Days Past Due	61-90 Days Past Due	90+ Days Past Due
$39,954.64	$0.00	$0.00	$0.00	$0.00

COPY

INVOICE

PSA Horticultural
8431 Prestwick Pl
Trinity, FL 34655

tom@psagrounds.com
+1 (727) 505-1532

PSA HORTICULTURAL

Bill to
Water's Edge Homeowners Association C/O
Management and Associates
720 Brooker Creek Boulevard, Suite 206
Oldsmar, Florida 34677

8000

MAY 0 8 2026

APPROVED	
ASSOC	WAE
G/L #	8020-000
~~BKACCT~~	
OPER	RESV
AMT	630 -

Invoice details
Invoice no.: 1691
Terms: Net 30
Invoice date: 05/07/2026
Due date: 06/06/2026

#	Date	Product or service	Description	Qty	Rate	Amount
1.	05/07/2026	**Water's Edge Landscape Inspection**	May 2026 Landscape Inspection	1	$630.00	$630.00

Total **$630.00**

Ways to pay

BANK

Note to customer

We truly appreciate your business!

PSA Services:
Specification Development
Landscape Inspections
Special Project Consulting

View and pay

WITHLACOOCHEE RIVER ELECTRIC COOPERATIVE, INC.

Your Touchstone Energy® Cooperative

P.O. Box 278 • Dade City, Florida 33526-0278

Account Number	**2189378** Cycle 17
Meter Number	40547871
Customer Number	20096167
Customer Name	WATERS EDGE CDD

Bill Date	**05/27/2026**
Amount Due	**63.78**
Current Charges Due	**06/18/2026**

District Office Serving You
Bayonet Point

See Reverse Side For More Information

Service Address	11909 SLIDELL ST
Service Description	PUMP
Service Classification	General Service Non-Demand

ELECTRIC SERVICE

From Date	From Reading	To Date	To Reading	Multiplier	Dem. Reading	KW Demand	kWh Used
04/22	88987	05/21	89207				220

Comparative Usage Information

Period	Days	Average kWh Per Day
May 2026	29	8
Apr 2026	33	8
May 2025	30	9

BILLS ARE DUE WHEN RENDERED

A 1.5 percent, but not less than $5, late charge will apply to unpaid balances as of 5:00 p.m. on the due date shown on this bill.

2 0 0 9 6 1 6 7

You have 24-hour access to manage your account on-line through Smarthub at www.wrec.net. If you would like to make a payment using your credit card, please call 855-938-3431. This number is WREC's Secure Pay-By-Phone system.

Previous Balance		68.40
Payment	68.40CR	
Balance Forward		0.00
Customer Charge	39.16	
Energy Charge 220 KWH @ 0.06090	13.40	
Fuel Adjustment 220 KWH @ 0.04375	9.63	
FL Gross Receipts Tax	1.59	
Total Current Charges		63.78
Total Due E.F.T.		63.78

DO NOT PAY
Total amount will be electronically transferred on or after 06/12/2026.

WITHLACOOCHEE RIVER ELECTRIC COOPERATIVE, INC.

Your Touchstone Energy® Cooperative

P.O. Box 278 • Dade City, Florida 33526-0278

Please Detach and Return This Portion With Your Payment To Ensure Accurate Posting.

See Reverse Side For Mailing Instructions

Bill Date: 05/27/2026

Use above space for address change ONLY.

District: BP17

2189378 BP17
WATERS EDGE CDD
C/O RIZZETTA & COMPANY
PO BOX 32414
CHARLOTTE NC 28232-2414

27 9 - 8795

Electronic Funds Transfer on or after	06/12/2026
TOTAL CHARGES DUE	63.78
DO NOT PAY	

00021893780000063780000063780 4

WITHLACOOCHEE RIVER ELECTRIC COOPERATIVE, INC.

Your Touchstone Energy® Cooperative

P.O. Box 278 • Dade City, Florida 33526-0278

Account Number	**2189381** Cycle 17
Meter Number	62225547
Customer Number	20096167
Customer Name	WATERS EDGE CDD

Bill Date	**05/27/2026**
Amount Due	**103.80**
Current Charges Due	**06/18/2026**

District Office Serving You
Bayonet Point

See Reverse Side For More Information

Service Address	11406 BELLE HAVEN DR
Service Description	WELL
Service Classification	General Service Non-Demand

ELECTRIC SERVICE

From Date	From Reading	To Date	To Reading	Multiplier	Dem. Reading	KW Demand	kWh Used
04/22	29290	05/21	29883				593

Comparative Usage Information

Period	Days	Average kWh Per Day
May 2026	29	20
Apr 2026	33	19
May 2025	30	7

BILLS ARE DUE WHEN RENDERED
A 1.5 percent, but not less than $5, late charge will apply to unpaid balances as of 5:00 p.m. on the due date shown on this bill.

2 0 0 9 6 1 6 7

You have 24-hour access to manage your account on-line through Smarthub at www.wrec.net. If you would like to make a payment using your credit card, please call 855-938-3431. This number is WREC's Secure Pay-By-Phone system.

Previous Balance		106.06
Payment	106.06CR	
Balance Forward		0.00
Customer Charge	39.16	
Energy Charge 593 KWH @ 0.06090	36.11	
Fuel Adjustment 593 KWH @ 0.04375	25.94	
FL Gross Receipts Tax	2.59	
Total Current Charges		103.80
Total Due E.F.T.		103.80

JUN - 1 2026

DO NOT PAY
Total amount will be electronically transferred on or after 06/12/2026.

WITHLACOOCHEE RIVER ELECTRIC COOPERATIVE, INC.

Your Touchstone Energy® Cooperative

P.O. Box 278 • Dade City, Florida 33526-0278

Please **Detach and Return** This Portion With Your Payment To Ensure Accurate Posting.

See Reverse Side For Mailing Instructions

Bill Date: 05/27/2026

Use above space for address change ONLY.

District: BP17

26 - 9 - 8433

2189381 **BP17**
WATERS EDGE CDD
3434 COLWELL AVE STE 200
TAMPA FL 33614-8390

Electronic Funds Transfer on or after	**06/12/2026**
TOTAL CHARGES DUE	**103.80**
DO NOT PAY	

00021893810000103800000103800 1

WITHLACOOCHEE RIVER ELECTRIC COOPERATIVE, INC.

Your Touchstone Energy® Cooperative

P.O. Box 278 • Dade City, Florida 33526-0278

Account Number	**2189382** Cycle 17
Meter Number	62225594
Customer Number	20096167
Customer Name	WATERS EDGE CDD

Bill Date	**05/27/2026**
Amount Due	**131.72**
Current Charges Due	**06/18/2026**

District Office Serving You
Bayonet Point

See Reverse Side For More Information

Service Address 11430 BIDDEFORD PL
Service Description WELL
Service Classification General Service Non-Demand

ELECTRIC SERVICE

From Date	From Reading	To Date	To Reading	Multiplier	Dem. Reading	KW Demand	kWh Used
04/22	24493	05/21	25346				853

Comparative Usage Information
Average kWh

Period	Days	Per Day
May 2026	29	29
Apr 2026	33	44
May 2025	30	2

BILLS ARE DUE WHEN RENDERED
A 1.5 percent, but not less than $5, late charge will apply to unpaid balances as of 5:00 p.m. on the due date shown on this bill.

2 0 0 9 6 1 6 7

You have 24-hour access to manage your account on-line through Smarthub at www.wrec.net. If you would like to make a payment using your credit card, please call 855-938-3431. This number is WREC's Secure Pay-By-Phone system.

Previous Balance		197.73
Payment	197.73CR	
Balance Forward		0.00
Customer Charge	39.16	
Energy Charge 853 KWH @ 0.06090	51.95	
Fuel Adjustment 853 KWH @ 0.04375	37.32	
FL Gross Receipts Tax	3.29	
Total Current Charges		131.72
Total Due E.F.T.		131.72

JUN - 1 2026

DO NOT PAY
Total amount will be electronically transferred on or after 06/12/2026.

WITHLACOOCHEE RIVER ELECTRIC COOPERATIVE, INC.

Your Touchstone Energy® Cooperative

P.O. Box 278 • Dade City, Florida 33526-0278

Please **Detach and Return** This Portion With Your Payment To Ensure Accurate Posting.

See Reverse Side For Mailing Instructions

Bill Date: 05/27/2026

Use above space for address change ONLY.

District: BP17

2189382 **BP17**
WATERS EDGE CDD
3434 COLWELL AVE STE 200
TAMPA FL 33614-8390

Electronic Funds Transfer on or after	**06/12/2026**
TOTAL CHARGES DUE	**131.72**
DO NOT PAY	

D0002189382000013172000013172O5

WITHLACOOCHEE RIVER ELECTRIC COOPERATIVE, INC.

Your Touchstone Energy® Cooperative

P.O. Box 278 • Dade City, Florida 33526-0278

Account Number	**2189384** Cycle 17
Meter Number	49382988
Customer Number	20096167
Customer Name	WATERS EDGE CDD

Bill Date	05/27/2026
Amount Due	1,467.31
Current Charges Due	06/18/2026

District Office Serving You
Bayonet Point

See Reverse Side For More Information

Service Address	9136 CREEDMOOR LN
Service Description	WELL
Service Classification	General Service Demand

ELECTRIC SERVICE

From Date	From Reading	To Date	To Reading	Multiplier	Dem. Reading	KW Demand	kWh Used
04/22	16792	05/21	27853		80.90	81	11061

Comparative Usage Information
Average kWh

Period	Days	Per Day
May 2026	29	381
Apr 2026	33	556
May 2025	30	520

BILLS ARE DUE WHEN RENDERED
A 1.5 percent, but not less than $5, late charge will apply to unpaid balances as of 5:00 p.m. on the due date shown on this bill.

Previous Balance	2,148.75
Payment	2,148.75CR
Balance Forward	0.00
Customer Charge	44.16
Demand Charge 81 KW @ 6.65000	538.65
Energy Charge 11,061 KWH @ 0.03290	363.91
Fuel Adjustment 11,061 KWH @ 0.04375	483.92
FL Gross Receipts Tax	36.67
Total Current Charges	1,467.31
Total Due E.F.T.	1,467.31

2 0 0 9 6 1 6 7

You have 24-hour access to manage your account on-line through Smarthub at www.wrec.net. If you would like to make a payment using your credit card, please call 855-938-3431. This number is WREC's Secure Pay-By-Phone system.

DO NOT PAY
Total amount will be electronically transferred on or after 06/12/2026.

WITHLACOOCHEE RIVER ELECTRIC COOPERATIVE, INC.

Your Touchstone Energy® Cooperative

P.O. Box 278 • Dade City, Florida 33526-0278

Please Detach and Return This Portion With Your Payment To Ensure Accurate Posting.

See Reverse Side For Mailing Instructions

Bill Date: 05/27/2026

Use above space for address change ONLY.

District: BP17

2189384 **BP17**
WATERS EDGE CDD
C/O RIZZETTA & COMPANY
PO BOX 32414
CHARLOTTE NC 28232-2414

Electronic Funds Transfer on or after	06/12/2026
TOTAL CHARGES DUE	**1,467.31**
DO NOT PAY	

00021893840001467310001467310 6